SITE PLAN DRAWINGS

FOR

AMERICA WALKS

IN SECTIONS 34 & 35, TOWNSHIP 37 SOUTH,
RANGE 39 EAST
CITY OF PORT ST. LUCIE, FLORIDA

PREPARED FOR

AMERICA WALKS AT PORT ST. LUCIE, LLC

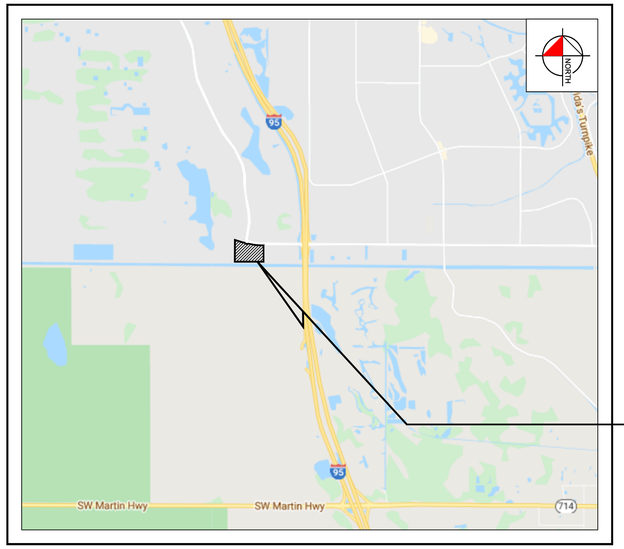

SITE

VICINITY MAP

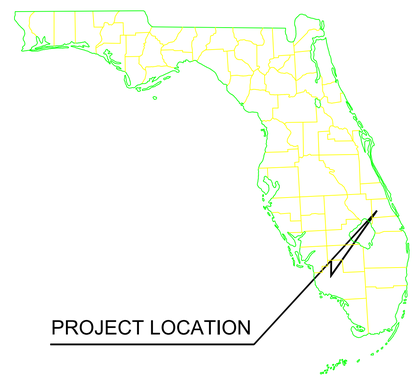

PROJECT LOCATION

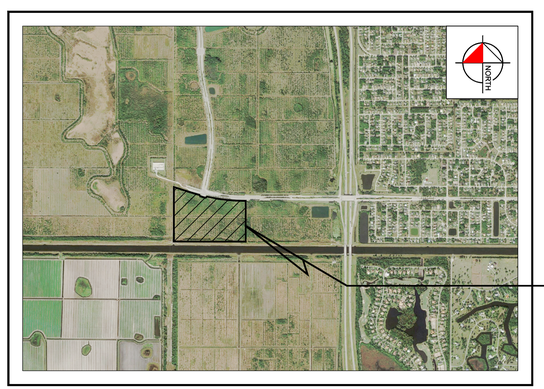

SITE

AERIAL PHOTOGRAPH

INDEX OF SHEETS

C0.0	COVER SHEET
C1.0	OVERALL SITE PLAN
C1.1 - C1.5	SITE PLAN
C1.6	SITE PLAN DETAILS

PROJECT TEAM

OWNER/DEVELOPER
AMERICA WALKS AT PORT ST. LUCIE, LLC
2211 MEDINA ROAD, SUITE 100
MEDINA, OH 44256
CONTACT: KEVIN BROKAW

SURVEYOR
CAULFIELD & WHEELER, INC.
7900 GLADES ROAD, SUITE 100
BOCA RATON, FL 33434
PHONE: (561) 392-1991

LANDSCAPE ARCHITECT
KIMLEY-HORN AND ASSOCIATES, INC.
189 S. ORANGE AVENUE, SUITE 1000
ORLANDO, FL 32801
CONTACT: SCOTT MINGONET, PLA
PHONE: (407) 898-1511
EMAIL: scott.mingonet@kimley-horn.com

CIVIL ENGINEER
KIMLEY-HORN AND ASSOCIATES, INC.
189 S. ORANGE AVENUE, SUITE 1000
ORLANDO, FL 32801
CONTACT: BROOKS A. STICKLER, P.E.
PHONE: (407) 898-1511
EMAIL: brooks.stickler@kimley-horn.com

ARCHITECT
FORUM ARCHITECTURE & INTERIOR DESIGN, INC.
237 S. WESTMONTE DRIVE, SUITE 220
ALTAMONTE SPRINGS, FL 32714
PHONE: (407) 830-1400

PREPARED BY
Kimley»Horn

© 2020 KIMLEY-HORN AND ASSOCIATES, INC.

189 S. Orange Avenue, Suite 1000, Orlando, FL 32801
Phone: (407) 898-1511
WWW.KIMLEY-HORN.COM CA 00000696

CITY OF PSL PROJECT NO. 20-039 A-1
PSLUSD PROJECT NO. 5355

BROOKS A. STICKLER, P.E.
FL. P.E. NO. 74031

AMERICA WALKS
11/24/2020
ENGINEER'S PROJECT No. 149948001

REVISIONS:

No.	DESCRIPTION	DATE	BY

Drawing name: K:\ORL_Civil\149948001-America Walks\CADD\DEVELOPMENT\Correct Site Plan\2020-04-02 - CORRECT FILES 2020\PlanSheets\C0.0 - COVER SHEET.dwg C0.0 - COVER SHEET Nov 25, 2020 11:18am by: Jeffrey.Rivera
This document, together with the concepts and designs presented herein, as an instrument of service, is intended only for the specific purpose and client for which it was prepared. Reuse of and improper reliance on this document without written authorization and adaptation by Kimley-Horn and Associates, Inc. shall be without liability to Kimley-Horn and Associates, Inc.

GENERAL NOTES:

1. ALL LANDSCAPE AREAS ABUTTING VEHICULAR USE AREAS SHALL BE CURBED OR PROTECTED BY CURB STOPS.
2. ALL BUILDING, PARKING AND ACCESS AREAS SHALL DOCUMENT COMPLIANCE WITH THE REQUIREMENTS OF THE AMERICAN DISABILITIES ACT PRIOR TO THE ISSUANCE OF A BUILDING PERMIT.
3. PROPOSED LIGHT POLES SHALL BE SHIELDED TO MINIMIZE EXCESS GLARE TO ADJACENT RESIDENTIAL AREAS AND ROADWAYS.
4. SOIL EROSION AND SEDIMENT CONTROL DEVICES SHALL BE IN PLACE PRIOR TO THE COMMENCEMENT OF CONSTRUCTION ACTIVITIES.
5. LANDSCAPING SHALL BE IN ACCORDANCE WITH THE REQUIREMENTS OF CHAPTER 153 OF THE LANDSCAPE CODE OF THE CITY OF PORT ST. LUCIE.
6. NO LANDSCAPING OTHER THAN GRASSES SHALL BE LOCATED WITHIN 10' OF A CITY UTILITY LINE OR APPURTENANCE. ALL OTHER UTILITIES SHALL BE A MINIMUM OF 5' HORIZONTAL SEPARATION FROM CITY UTILITY MAINS FOR PARALLEL INSTALLATIONS AND A MINIMUM 18" BELOW CITY MAINS. (ALL MEASUREMENTS ARE TAKE FROM OUTSIDE TO OUTSIDE.)
7. NO LANDSCAPING SHALL BE PLACED IN A MANNER THAT WOULD CREATE CONFLICTS WITH THE INTENDED OPERATION AND MAINTENANCE OF ANY EXISTING UTILITY.
8. THIS APPLICATION IS NOT VESTED FOR ANY MUNICIPAL FEES. ALL FEES ARE CALCULATED AT TIME OF PAYMENT. THIS INCLUDES SPECIFICALLY IMPACT FEES, UPLAND PRESERVE FEES AND ANY ADMINISTRATIVE REVIEW FEES FOR CITY DEPARTMENTS. NO FEES ARE VESTED BASED ON DATE OF CITY COUNCIL APPROVAL.
9. SIGNS ARE NOT PART OF THIS REVIEW AND SHALL BE PERMITTED SEPARATELY FROM THIS APPLICATION. (SEE CHAPTER 155 (SIGN CODE) CITY OF PORT ST LUCIE LAND DEVELOPMENT REGULATIONS AND SECTION III OF THE ARCHITECTURAL DESIGNS STANDARDS.)
10. THE PROPERTY OWNER, CONTRACTOR, AND AUTHORIZED REPRESENTATIVES SHALL PROVIDE PICKUP, REMOVAL, AND DISPOSAL OF LITTER WITHIN THE PROJECT LIMITS AND SHALL BE RESPONSIBLE FOR MAINTENANCE OF THE AREA FROM THE EDGE OF PAVEMENT TO THE PROPERTY LINE WITHIN THE CITY'S RIGHT OF WAY IN ACCORDANCE WITH CITY CODE, SECTION 41.08 (G).
11. UTILITY EASEMENTS MUST BE A MINIMUM OF 20' WIDE FOR ALL MAINS (GRAVITY SEWER, POTABLE WATER, FORCE) NOT LOCATED WITHIN OR ADJACENT TO A CITY-OWNED RIGHT OF WAY.

NORTH

GRAPHIC SCALE IN FEET
0 50 100 200

UTILITY SERVICE:

WATER SERVICE AND SANITARY SEWER WILL BE PROVIDED BY CITY OF PORT SAINT LUCIE UTILITIES SYSTEMS DEPARTMENT.

STORMWATER MANAGEMENT:

STORMWATER MANAGEMENT SYSTEM WILL CONSIST OF CATCH INLETS THAT WILL ROUTE STORMWATER TO PROPOSED STORMWATER PONDS ON-SITE. THE PROPOSED ON-SITE STORMWATER PONDS WILL PROVIDE WATER QUALITY TREATMENT AND ATTENUATION FOR ON-SITE, OFF-SITE, AND FUTURE DEVELOPMENT EAST OF THE PROPERTY.. A DRAINAGE STUB-OUT WILL BE PROVIDED FOR THE FUTURE COMMERCIAL PARCEL EAST OF THE PROJECT SITE. THE RUNOFF WILL ULTIMATELY DRAIN TO THE EXISTING CANAL SOUTH OF THE SITE.

FLOOD ZONE:

BASED ON FEMA FLOOD MAP 12111C0400J, DATED FEBRUARY 16, 2012 SHOWS THE SUBJECT PROPERTY IS FULLY LOCATED WITHIN ZONE X, OUTSIDE THE FLOODPLAIN.

LANDSCAPING:

ALL LANDSCAPING SHALL MEET OR EXCEED THE REQUIREMENTS OF THE CITY OF PORT SAINT LUCIE.

SOLID WASTE SERVICES

TRASH DISPOSAL WILL BE VIA CURB-SIDE PICKUP FOR THE DETACHED LIVING FACILITY UNITS. DUMPSTERS WILL BE PROVIDED FOR ALL OTHER BUILDINGS.

PHASING:

ALL ON-SITE AND OFF-SITE SITE WORK INFRASTRUCTURE WILL BE CONSTRUCTED IN ONE PHASE.

WELLFIELD PROTECTION ORDINANCE STATEMENT

THE SITE IS LOCATED WITHIN THE ZONE OF PROTECTION. THE WELLFIELD PROTECTION ORDINANCE SHALL APPLY TO THIS PROJECT.

LEGAL DESCRIPTION:

TRACT D, OF SOUTHERN GROVE REPLAT NO. 30, ACCORDING TO THE PLAT THEREOF, AS RECORDED IN PLAT BOOK 87, PAGES 17–19, OF THE PUBLIC RECORDS OF ST. LUCIE COUNTY, FLORIDA.

PARKING REQUIRED:

DUPLEX/VILLA:	1.5 SPACES PER UNIT
303 VILLA UNITS:	455 SPACES
INDEPENDENT LIVING APARTMENT UNITS:	1 SPACE PER UNIT
112 UNITS:	112 SPACES
CLUB HOUSE:	15 SPACES (MIN.)
TOTAL SPACES REQUIRED:	582 SPACES

PROVIDED PARKING:

REGULAR 10'X18' PARKING SPACES:	143 SPACES
HANDICAP SURFACE PARKING SPACES:	6 SPACES
VILLA GARAGE (1)/DRIVEWAY (1) SPACES:	606 SPACES
TOTAL SPACES PROVIDED:	755 SPACES

TOTAL UNITS:

4–PLEX (4 DU/BLDG)	1 STORY (21'–3" BLDG HEIGHT); 7,937 SF GROSS EACH; 17 BUILDINGS TOTAL (68 UNITS TOTAL)
5–PLEX (5 DU/BLDG)	1 STORY (21'–3" BLDG HEIGHT); 9,843 SF GROSS EACH; 23 BUILDINGS TOTAL (115 UNITS TOTAL)
6–PLEX (6 DU/BLDG)	1 STORY (21'–3" BLDG HEIGHT); 11,850 SF GROSS EACH; 20 BUILDINGS TOTAL (120 UNITS TOTAL)
APARTMENTS	4 STORIES (59'–6" BLDG HEIGHT); 137,688 SF GROSS EACH; 2 BUILDINGS TOTAL (112 UNITS TOTAL)
TOTAL UNITS:	415 UNITS

NON-RESIDENTIAL BUILDING DATA:

CLUBHOUSE	2 STORY (40'–0" BLDG HEIGHT); 15,297 SF GROSS; (1.04% OF OVERALL GROSS)
GAZEBO (3 TOTAL BUILDINGS)	1 STORY (15'–0" BLDG HEIGHT); 798 SF GROSS (0.03% OF OVERALL GROSS)
MAINTENANCE BUILDING	1 STORY (9'–4" BLDG HEIGHT); 751 SF GROSS (0.03% OF OVERALL GROSS)
POOL HOUSE/RESTROOM	1 STORY (9'–4" BLDG HEIGHT); 687 SF GROSS (0.03% OF OVERALL GROSS)

TOTAL BEDROOMS

VILLAS: 2 BEDROOMS/UNIT	606 BEDROOMS
RESIDENTIAL A: 1 BEDROOMS/UNIT	92 BEDROOMS
RESIDENTIAL B: 2 BEDROOMS/UNIT	40 BEDROOMS
TOTAL	738 BEDROOMS

SITE DATA TABLE:

TOTAL PROPOSED ON–SITE AREA:	60.00 ACRES (2,613,600 SF)
PARCEL ID'S:	4315–700–0032–000–1
CURRENT ZONING:	SLC–AG–5
PROPOSED ZONING (THRU PUD REZONING):	MPUD
FUTURE LAND USE:	NEW COMMUNITY DEVELOPMENT
PROPOSED USE:	MULTI–FAMILY
PROPOSED OFF–SITE WORK:	0.56 ACRES (24,394 SF) OFFSITE WORK IS FOR DRIVEWAY WITHIN INGRESS/EGRESS EASEMENT.

SETBACKS:	BUILDING:
FRONT:	25 FT
SIDES:	10 FT
REAR:	10 FT

RESIDENTIAL DENSITY CALCULATIONS:

TOTAL DWELLING UNITS:	415 UNITS
PROPOSED DENSITY CALCULATION: (PROPOSED 415 DWELLING UNITS/60.00 ACRES)	
PROPOSED DENSITY:	6.917 DU/ACRE

RESIDENTIAL UNIT BREAKDOWN:

UNIT TYPE(# PROPOSED):	AREA PER UNIT TYPE:
A1 (14)	746 SF
A1–DEN (14)	896 SF
A2 (8)	989 SF
A3 CORNER (24)	900 SF
A3 (24)	892 SF
A4 (8)	735 SF
B1 (16)	1214 SF
B2 (4)	1022 SF

OPEN SPACE:

VILLA/RESIDENTIAL/MISC BUILDING AREA =	14.94 ACRES (24.90%)
PAVEMENT/SIDEWALK AREA (IMPERVIOUS) =	15.72 ACRES (26.20%)
POND SURFACE AREA =	8.32 ACRES (13.87%)
TOTAL OPEN SPACE (PERVIOUS) AREA* =	21.02 ACRES (35.03%)
TOTAL SITE AREA =	60.00 ACRES

*OPEN SPACE INCLUDES A MINIMUM 3 AC. (5%) MINIMUM USABLE OPEN SPACE

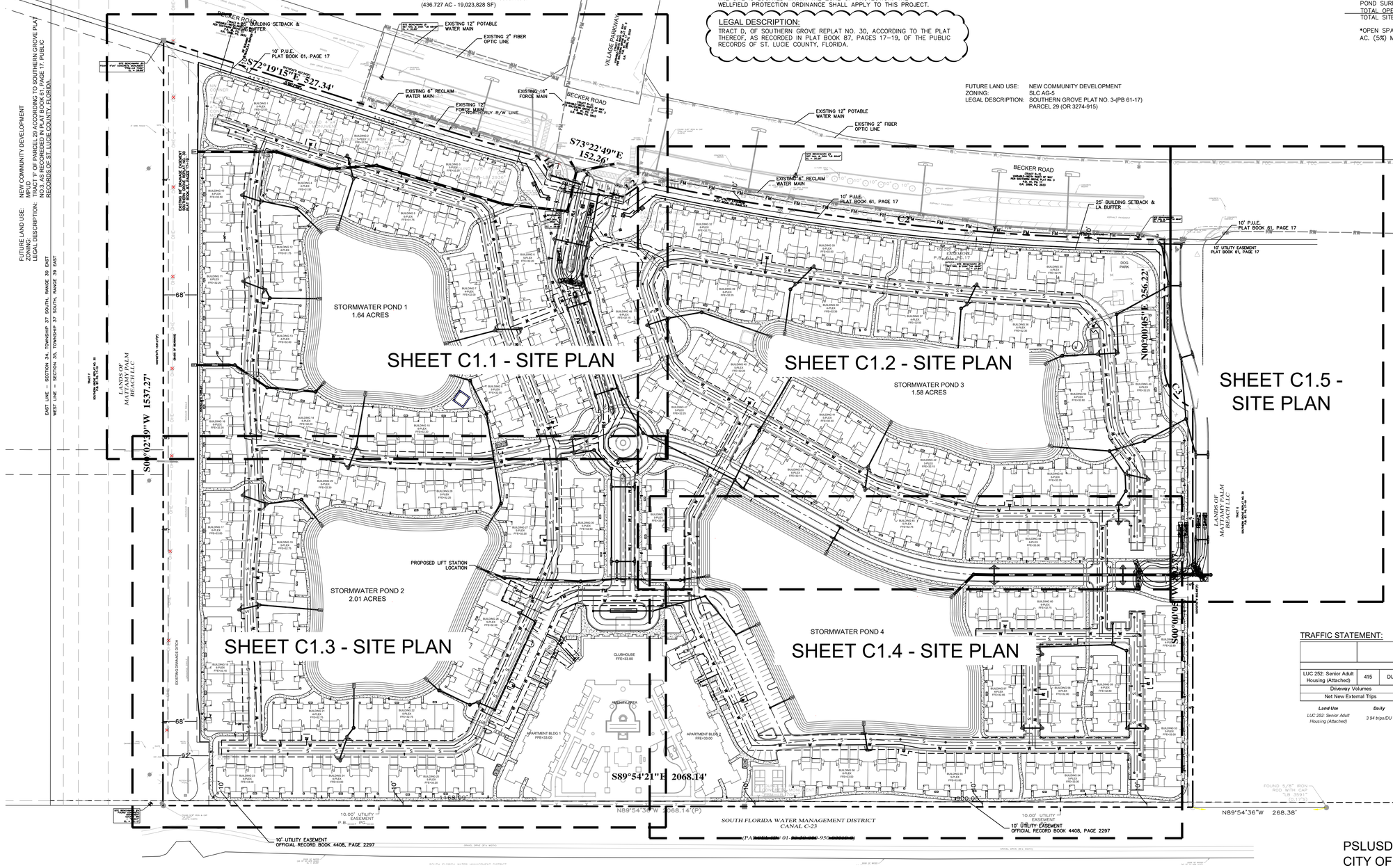

ENVIRONMENTAL PROTECTION STATEMENT

Description	Found (Yes/No)	Agency Contact Information	Management Plan (Yes/No)	Relocation Plan (Yes/No)
Wetlands	Yes	SFWMD/USACE	Yes	No
Rare Habitat	No	N/A	N/A	N/A
Threatened Species	Yes	FFWCC/USFWS	Yes	No
Endangered Species	Yes	FFWCC/USFWS	Yes	No
Species of Special Concern	No	N/A	N/A	N/A
Invasive/Exotic Vegetation	No	N/A	N/A	N/A

TRAFFIC STATEMENT:

LUC 252: Senior Adult Housing (Attached)	415	DU	1,635	83	29	54	104	57	47
Driveway Volumes			1,635	83	29	54	104	57	47
Net New External Trips			1,635	83	29	54	104	57	47

Land Use	Daily	AM Peak Hour	PM Peak Hour	Pass-By
LUC 252: Senior Adult Housing (Attached)	3.94 trips/DU	0.20 trips/DU (35% in/65% out)	0.25 trips/DU (55% in/45% out)	0.0%

PSLUSD PROJECT NO. 5355
CITY OF PSL PROJECT NO. 20-039 A-1

No.	REVISIONS	DATE	BY

Kimley»Horn
© 2020 KIMLEY-HORN AND ASSOCIATES, INC.
189 S. ORANGE AVENUE, SUITE 1000, ORLANDO, FL 32801
PHONE: 407-898-1511
WWW.KIMLEY-HORN.COM CA 00000696

LICENSED PROFESSIONAL
BROOKS A. STICKLER, P.E.
FLORIDA LICENSE NUMBER 74031

KHA PROJECT	149948001
DATE	11/24/2020
SCALE	AS SHOWN
DESIGNED BY	ST
DRAWN BY	ST
CHECKED BY	BAS
DATE:	2020

OVERALL SITE PLAN

AMERICA WALKS

CITY OF PORT ST. LUCIE FLORIDA

SHEET NUMBER
C1.0

This document, together with the concepts and designs presented herein, as an instrument of service, is intended only for the specific purpose and client for which it was prepared. Reuse of and improper reliance on this document without written authorization and adaptation by Kimley-Horn and Associates, Inc. shall be without liability to Kimley-Horn and Associates, Inc.

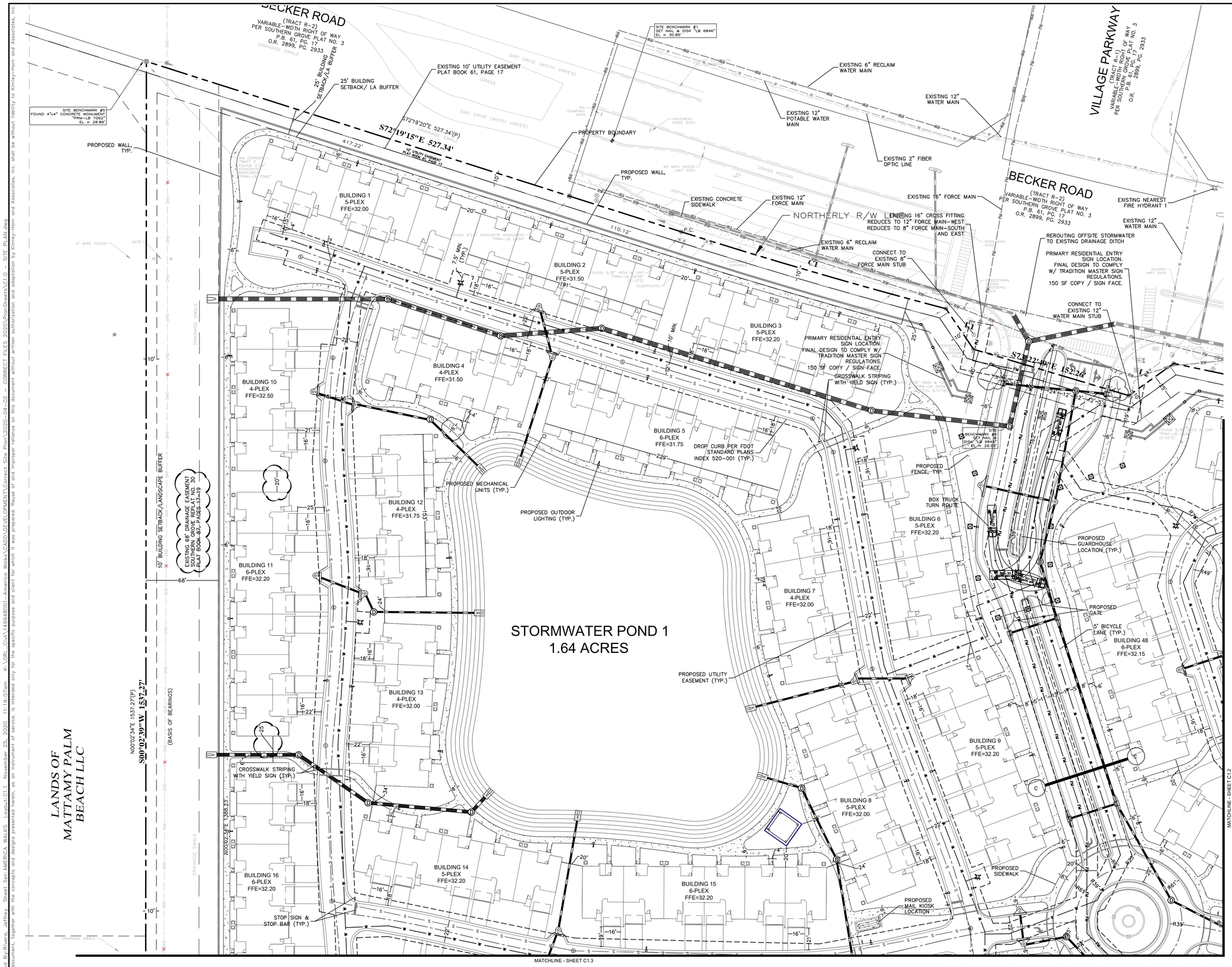

No.	REVISIONS	DATE	BY

Kimley»Horn

© 2020 KIMLEY-HORN AND ASSOCIATES, INC.

189 S. ORANGE AVENUE, SUITE 1000, ORLANDO, FL 32801
PHONE: 407-898-1511
WWW.KIMLEY-HORN.COM CA 00000696

LICENSED PROFESSIONAL
BROOKS A. STICKLER, P.E.
FLORIDA LICENSE NUMBER 74031
DATE: 11/24/2020

KHA PROJECT 149948001

SCALE	AS SHOWN
DESIGNED BY	ST
DRAWN BY	ST
CHECKED BY	BAS

SITE PLAN

AMERICA WALKS

CITY OF PORT ST. LUCIE FLORIDA

SHEET NUMBER
C1.1

PSLUSD PROJECT NO. 5355 CITY OF PSL PROJECT NO. 20-039 A-1

Posted By:Rivero, Jeffrey Sheet Set:AMERICA WALKS Layout:C1.1 November 25, 2020 11:19:07am K:\ORL_Civil\149948001-America Walks\CADD\DEVELOPMENT\Correct Site Plan\2020-04-02 - CORRECT FILES 2020\PlanSheets\C1.0 - SITE PLAN.dwg
This document, together with the concepts and designs presented herein, as an instrument of service, is intended only for the specific purpose and client for which it was prepared. Reuse of and improper reliance on this document without written authorization and adaptation by Kimley-Horn and Associates, Inc. shall be without liability to Kimley-Horn and Associates, Inc.

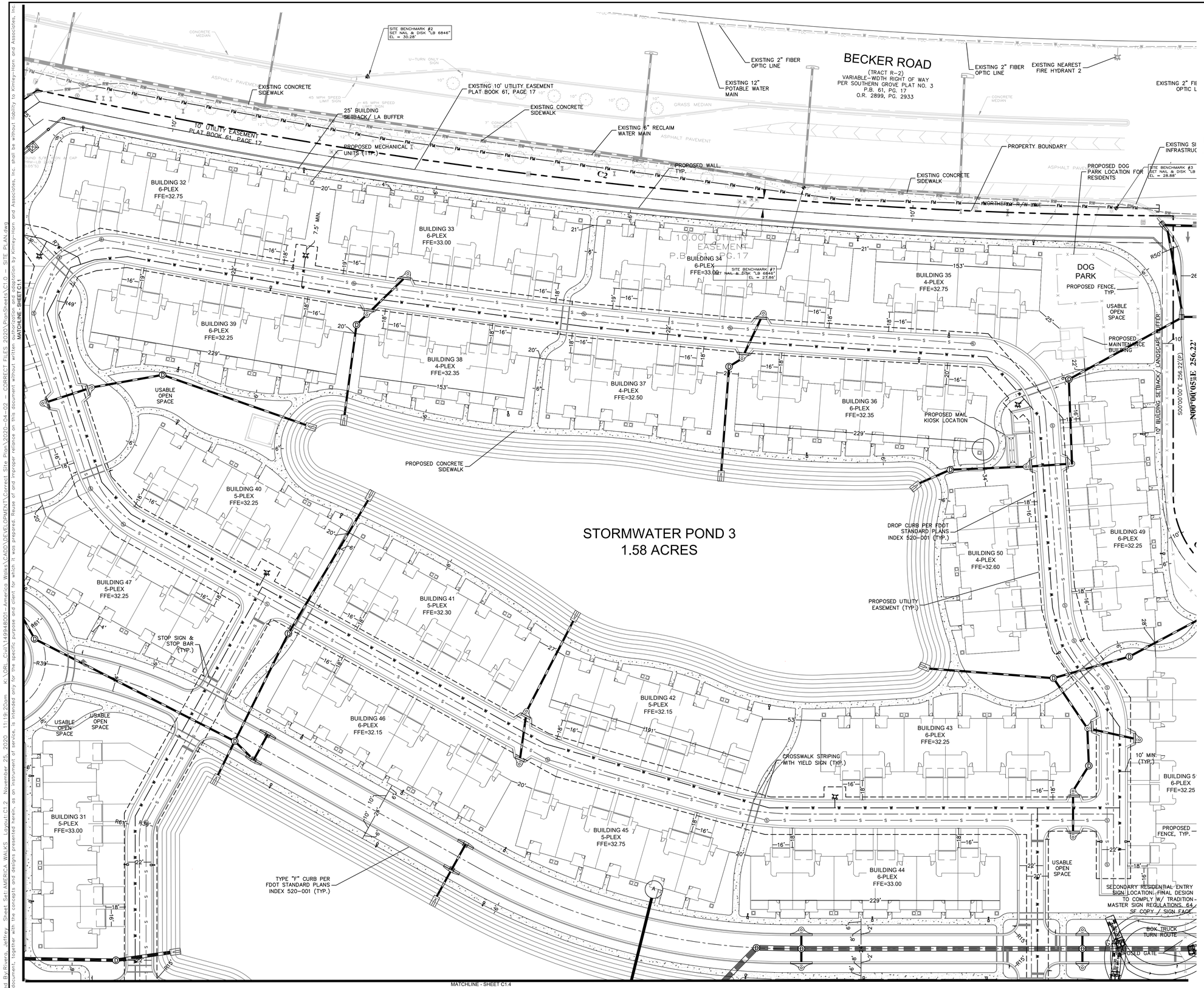

NORTH

GRAPHIC SCALE IN FEET
0 20 40 80

LEGEND

- PROPERTY BOUNDARY
- PROPOSED CENTERLINE
- PROPOSED CONCRETE SIDEWALK
- EXISTING POTABLE WATER MAIN
- EXISTING RECLAIM WATER MAIN
- EXISTING FORCE MAIN
- EXISTING FIBER OPTIC
- PROPOSED UTILITY EASEMENT
- PROPOSED STORM INFRASTRUCTURE
- PROPOSED POTABLE WATER MAIN
- PROPOSED SANITARY SEWER MAIN
- PROPOSED FORCE MAIN
- PROPOSED SANITARY SEWER MANHOLE

PSLUSD PROJECT NO. 5355
CITY OF PSL PROJECT NO. 20-039 A-1

No.	REVISIONS	DATE	BY

Kimley»Horn

© 2020 KIMLEY-HORN AND ASSOCIATES, INC.
189 S. ORANGE AVENUE, SUITE 1000, ORLANDO, FL 32801
PHONE: 407-898-1511
WWW.KIMLEY-HORN.COM CA 00000696

LICENSED PROFESSIONAL
BROOKS A. STICKLER, P.E.
FLORIDA LICENSE NUMBER 74031

KHA PROJECT 149948001
DATE 11/24/2020
SCALE AS SHOWN
DESIGNED BY ST
DRAWN BY ST
CHECKED BY BAS
DATE: 2020

SITE PLAN

AMERICA WALKS

CITY OF PORT ST. LUCIE FLORIDA

SHEET NUMBER
C1.2

Plotted By:Rivero, Jeffrey Sheet Set:AMERICA WALKS Layout:C1.2 November 25, 2020 11:19:20am K:\ORL_Civil\149948001-America Walks\CAD\DEVELOPMENT\Correct Site Plan\2020-04-02 - CORRECT FILES 2020\PlanSheets\C1.0 - SITE PLAN.dwg
This document, together with the concepts and designs presented herein, as an instrument of service, is intended only for the specific purpose and client for which it was prepared. Reuse of and improper reliance on this document without written authorization by Kimley-Horn and Associates, Inc. shall be without liability to Kimley-Horn and Associates, Inc.

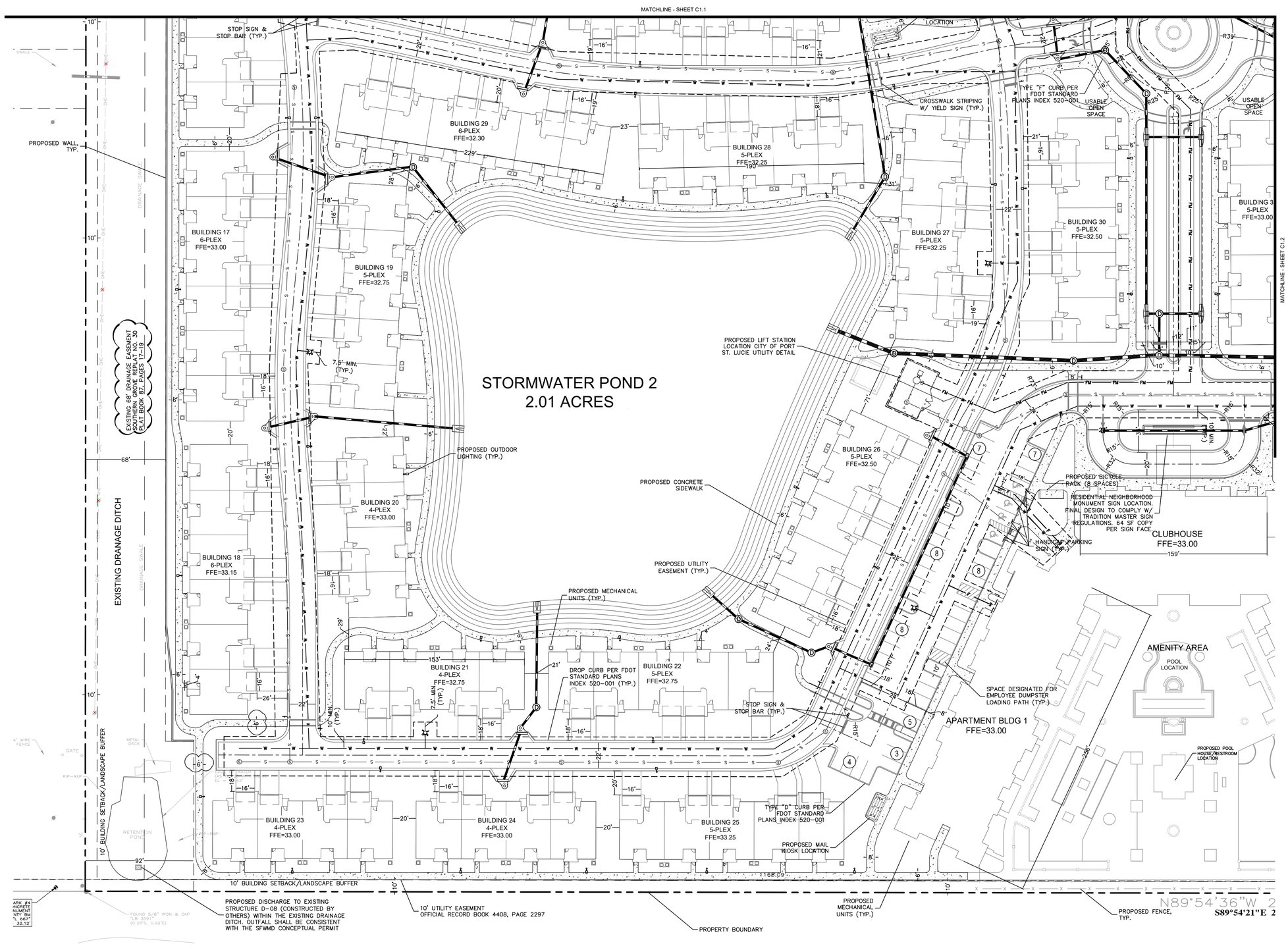

PSLUSD PROJECT NO. 5355
CITY OF PSL PROJECT NO. 20-039 A-1

No.	REVISIONS	DATE	BY

Kimley»Horn

© 2020 KIMLEY-HORN AND ASSOCIATES, INC.
189 S. ORANGE AVENUE, SUITE 1000, ORLANDO, FL 32801
PHONE: 407-898-1511
WWW.KIMLEY-HORN.COM CA 00000696

LICENSED PROFESSIONAL
BROOKS A. STICKLER, P.E.
FLORIDA LICENSE NUMBER 74031
DATE: 2020

KHA PROJECT 149948001
DATE 11/24/2020
SCALE AS SHOWN
DESIGNED BY ST
DRAWN BY ST
CHECKED BY BAS

SITE PLAN

AMERICA WALKS

CITY OF PORT ST. LUCIE FLORIDA

SHEET NUMBER
C1.3

Plotted By:Rivero, Jeffrey Sheet Set:AMERICA WALKS Layout:C1.3 November 25, 2020 11:19:37am K:\ORL_Civil\149948001-America Walks\CAD\DEVELOPMENT\Correct Site Plan\2020-04-02 - CORRECT FILES 2020\PlanSheets\C1.0 - SITE PLAN.dwg
This document, together with the concepts and designs presented herein, as an instrument of service, is intended only for the specific purpose and client for which it was prepared. Reuse of and improper reliance on this document without written authorization and adaptation by Kimley-Horn and Associates, Inc. shall be without liability to Kimley-Horn and Associates, Inc.

MATCHLINE - SHEET C1.2

MATCHLINE - SHEET C1.3

NORTH

GRAPHIC SCALE IN FEET
0 20 40 80

BUILDING 31
5-PLEX
FFE=33.00

BUILDING 45
5-PLEX
FFE=32.75

BUILDING 44
6-PLEX
FFE=33.00

6-PLEX
FFE=32.25

USABLE OPEN SPACE

PROPOSED FENCE, TYP.

SECONDARY RESIDENTIAL ENTRY SIGN LOCATION. FINAL DESIGN TO COMPLY W/ TRADITION MASTER SIGN REGULATIONS. 64 SF COPY / SIGN FACE.

TYPE "F" CURB PER FDOT STANDARD PLANS INDEX 520-001 (TYP.)

BOX TRUCK TURN ROUTE

GATE
PROPOSED GATE

S00°00'00"W 802.68'(P)

S00°00'15"W 802.7

SECONDARY RESIDENTIAL ENTRY SIGN LOCATION. FINAL DESIGN TO COMPLY W/ TRADITION MASTER SIGN REGULATIONS. 64 SF COPY / SIGN FACE.

BUILDING 60
6-PLEX
FFE=32.75

USABLE OPEN SPACE

TYPE "D" CURB PER FDOT STANDARD PLANS INDEX 520-001

STORMWATER POND 4
3.07 ACRES

PROPOSED BICYCLE RACK (9 SPACES)

PROPOSED UTILITY EASEMENT (TYP.)

CROSSWALK STRIPING WITH YIELD SIGN (TYP.)

BUILDING 52
4-PLEX
FFE=32.80

PROPOSED FENCE, TYP.

7.5' MIN. (TYP.)

BUILDING 57
4-PLEX
FFE=32.65

BUILDING 58
4-PLEX
FFE=32.80

BUILDING 59
4-PLEX
FFE=32.80

HANDICAP PARKING SIGN (TYP.)

DROP CURB PER FDOT STANDARD PLANS INDEX 520-001

STOP SIGN & STOP BAR (TYP.)

BUILDING 53
5-PLEX
FFE=33.00

APARTMENT BLDG 2
FFE=33.00

PROPOSED MAIL KIOSK LOCATION

BUILDING 56
6-PLEX
FFE=33.00

BUILDING 55
5-PLEX
FFE=33.00

BUILDING 54
5-PLEX
FFE=33.00

10' MIN. (TYP.)

10' BUILDING SETBACK/LANDSCAPE BUFFER

10' BUILDING SETBACK/LANDSCAPE BUFFER

"W 2068.14'(P)
54'21"E 2068.14'

PROPOSED PICKLEBALL COURT LOCATION (DESIGNED BY OTHERS)

PROPOSED FENCE AROUND PICKLE BALL COURTS

PROPOSED MECHANICAL UNITS (TYP.)

10' UTILITY EASEMENT OFFICIAL RECORD BOOK 4408, PAGE 2297

SOUTH FLORIDA WATER MANAGEMENT DISTRICT CANAL C-23

(PARCEL ID# 01-38-38-000-950-00010-0)

LEGEND

- PROPERTY BOUNDARY
- PROPOSED CENTERLINE
- PROPOSED CONCRETE SIDEWALK
- EXISTING POTABLE WATER MAIN
- EXISTING RECLAIM WATER MAIN
- EXISTING FORCE MAIN
- EXISTING FIBER OPTIC
- PROPOSED UTILITY EASEMENT
- PROPOSED STORM INFRASTRUCTURE
- PROPOSED POTABLE WATER MAIN
- PROPOSED SANITARY SEWER MAIN
- PROPOSED FORCE MAIN
- PROPOSED SANITARY SEWER MANHOLE

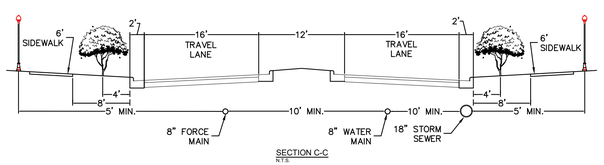

SECTION C-C
N.T.S.

PSLUSD PROJECT NO. 5355
CITY OF PSL PROJECT NO. 20-039 A-1

No.	REVISIONS	DATE	BY

Kimley»Horn

© 2020 KIMLEY-HORN AND ASSOCIATES, INC.
189 S. ORANGE AVENUE, SUITE 1000, ORLANDO, FL 32801
PHONE: 407-898-1511
WWW.KIMLEY-HORN.COM CA 00000696

LICENSED PROFESSIONAL
BROOKS A. STICKLER, P.E.
FLORIDA LICENSE NUMBER
74031
DATE: 2020

KHA PROJECT	149948001
DATE	11/24/2020
SCALE	AS SHOWN
DESIGNED BY	ST
DRAWN BY	ST
CHECKED BY	BAS

SITE PLAN

AMERICA WALKS

CITY OF PORT ST. LUCIE FLORIDA

SHEET NUMBER
C1.4

Plotted By:Rivera, Jeffrey Sheet Set:AMERICA WALKS Layout:C1.4 November 25, 2020 11:19:54am K:\ORL_Civil\149948001-America Walks\CADD\DEVELOPMENT\Correct Site Plan\2020-04-02 - CORRECT FILES 2020\PlanSheets\C1.0 - SITE PLAN.dwg
This document, together with the concepts and designs presented herein, as an instrument of service, is intended only for the specific purpose and client for which it was prepared. Reuse of and improper reliance on this document without written authorization and adaptation by Kimley-Horn and Associates, Inc. shall be without liability to Kimley-Horn and Associates, Inc.

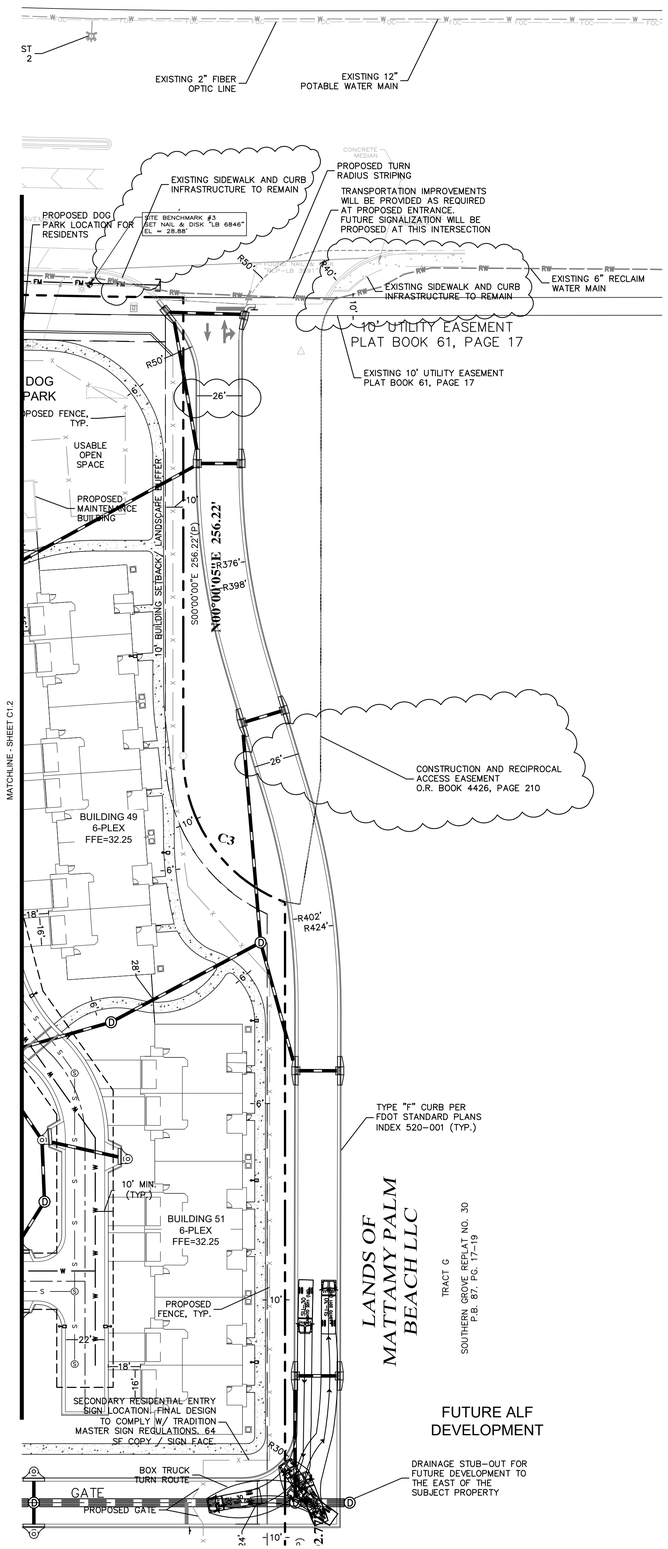

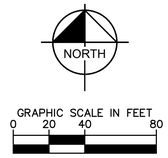

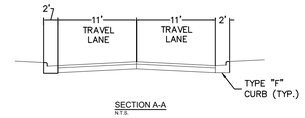

SECTION A-A
N.T.S.

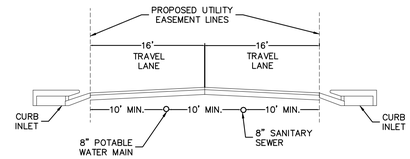

SECTION B-B
N.T.S.

LEGEND

- PROPERTY BOUNDARY
- PROPOSED CENTERLINE
- PROPOSED CONCRETE SIDEWALK
- EXISTING POTABLE WATER MAIN
- EXISTING RECLAIM WATER MAIN
- EXISTING FORCE MAIN
- EXISTING FIBER OPTIC
- PROPOSED UTILITY EASEMENT
- PROPOSED STORM INFRASTRUCTURE
- PROPOSED POTABLE WATER MAIN
- PROPOSED SANITARY SEWER MAIN
- PROPOSED FORCE MAIN
- PROPOSED SANITARY SEWER MANHOLE

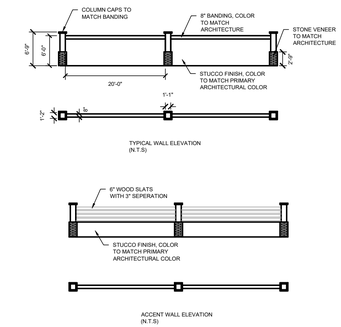

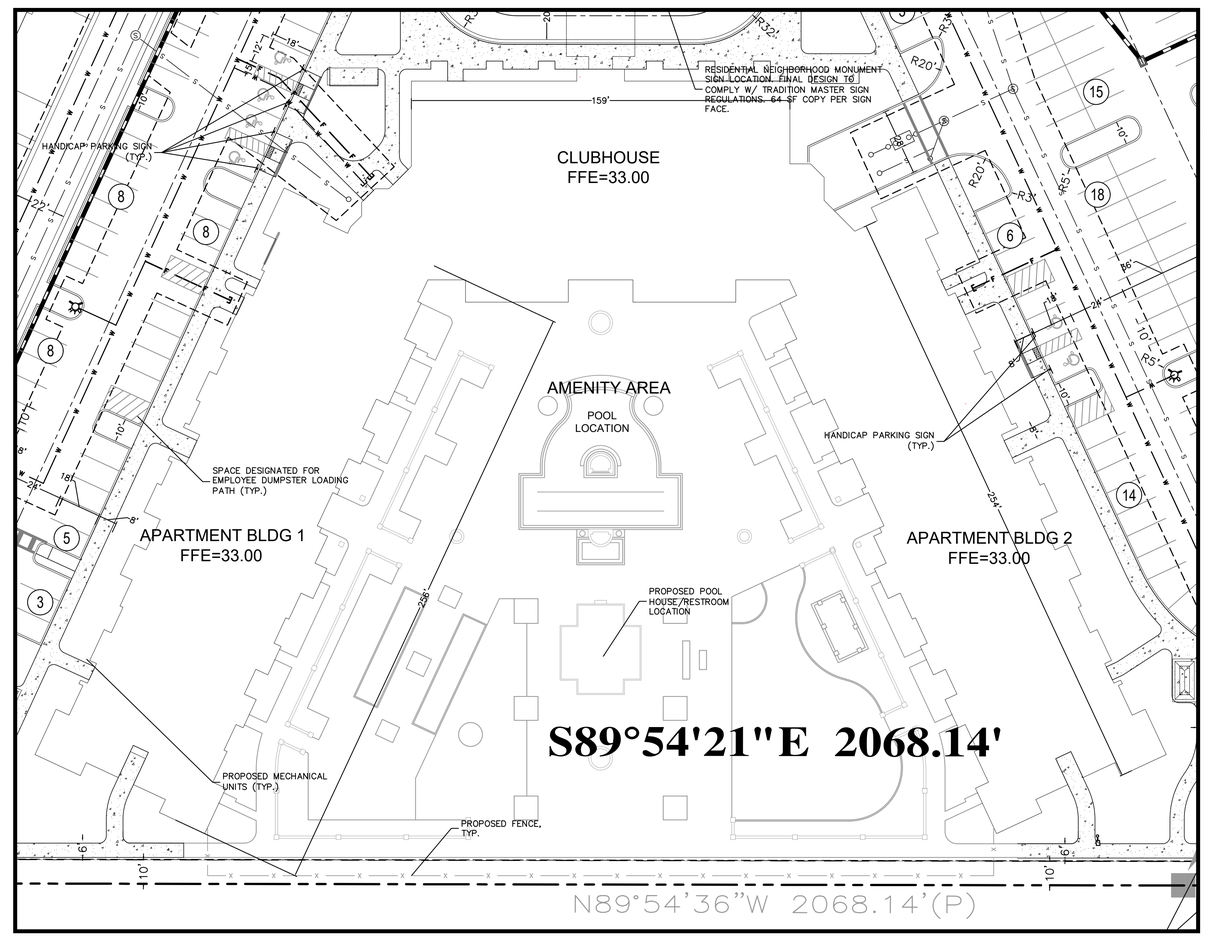

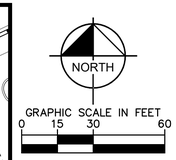

PSLUSD PROJECT NO. 5355
CITY OF PSL PROJECT NO. 20-039 A-1

No.	REVISIONS	DATE	BY

Kimley»Horn

© 2020 KIMLEY-HORN AND ASSOCIATES, INC.
189 S. ORANGE AVENUE, SUITE 1000, ORLANDO, FL 32801
PHONE: 407-898-1511
WWW.KIMLEY-HORN.COM CA 00000696

LICENSED PROFESSIONAL
BROOKS A. STICKLER, P.E.
FLORIDA LICENSE NUMBER 74031
DATE: 2020

KHA PROJECT 149948001	
DATE	11/24/2020
SCALE	AS SHOWN
DESIGNED BY	ST
DRAWN BY	ST
CHECKED BY	BAS

SITE PLAN

AMERICA WALKS

CITY OF PORT ST. LUCIE FLORIDA

SHEET NUMBER
C1.5

Plotted By:Rivera, Jeffrey Sheet Set:AMERICA WALKS Layout:C1.5 November 25, 2020 11:20:16am K:\ORL_Civil\149948001-America Walks\CADD\DEVELOPMENT\Correct Site Plan\2020-04-02 - CORRECT FILES 2020\PlanSheets\C1.0 - SITE PLAN.dwg
This document, together with the concepts and designs presented herein, as an instrument of service, is intended only for the specific purpose and client for which it was prepared. Reuse of and improper reliance on this document without written authorization and adaptation by Kimley-Horn and Associates, Inc. shall be without liability to Kimley-Horn and Associates, Inc.

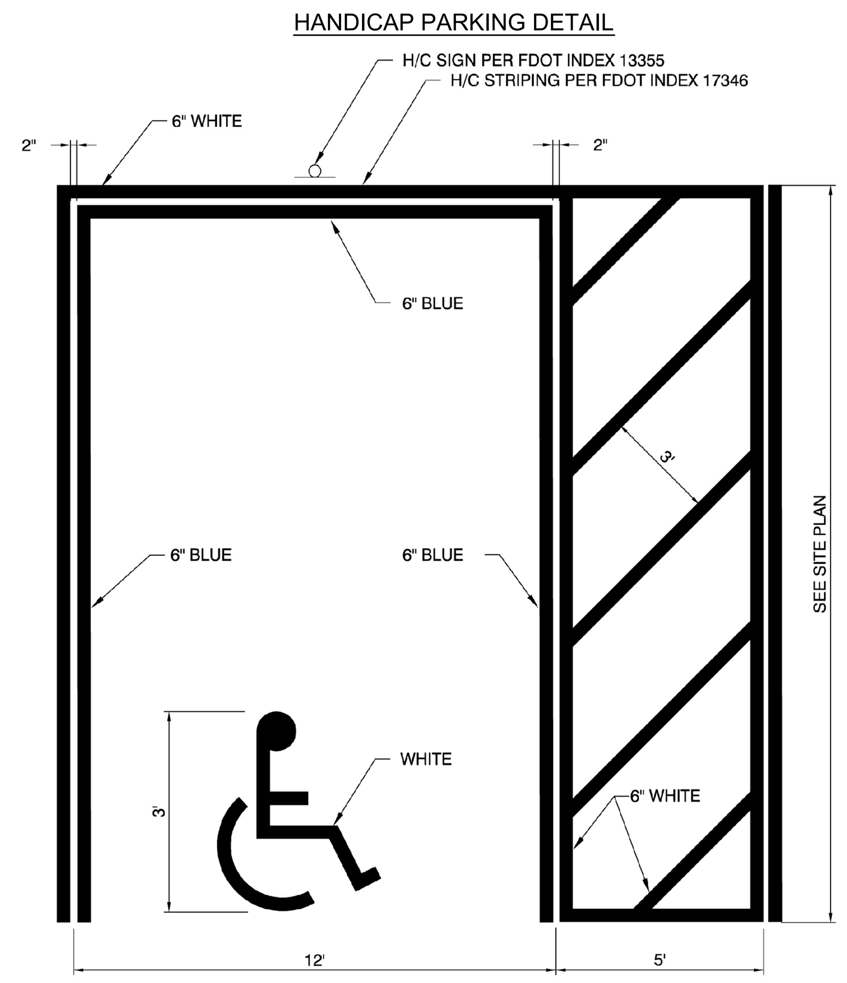

HANDICAP PARKING PAVEMENT MARKING

NTS

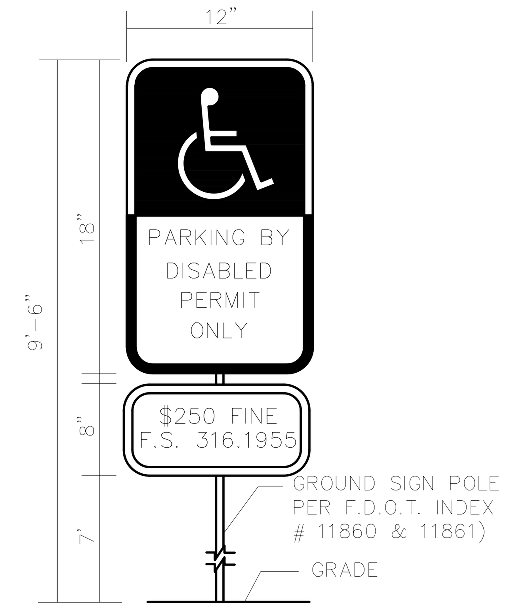

NOTES:

1. ALL LETTERS ARE 1" SERIES "C" PER MUTCD.
2. TOP PORTION OF SIGN SHALL HAVE REFLECTORIZED (ENGINEERING GRADE) BLUE BACKGROUND WITH WHITE REFLECTORIZED LEGEND AND BORDER.
3. BOTTOM PORTION OF SIGN SHALL HAVE A REFLECTORIZED (ENGINEERING GRADE) WHITE BACKGROUND WITH BLACK OPAQUE LEGEND AND BORDER.
4. FINE NOTIFICATION SIGN SHALL HAVE A REFLECTORIZED (ENGINEERING GRADE) WHITE BACKGROUND WITH BLACK OPAQUE LEGEND AND BORDER.
5. ONE (1) SIGN REQUIRED FOR EACH PARKING SPACE.
6. INSTALLATION HEIGHT OF SIGN SHALL BE IN ACCORDANCE WITH SECTION 24-23 OF THE MANUAL ON UNIFORM TRAFFIC CONTROL DEVICES, LATEST EDITION (MUTCD).

HANDICAP SIGN DETAIL

NTS

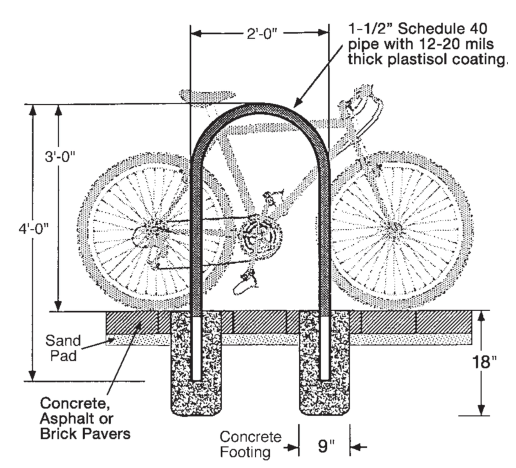

BIKE RACK DETAIL

NTS

KEY NOTES

01 TRASH COMPACTOR INSTALLED BY OTHERS. CONTRACTOR SHALL SUPPLY ALL REQUIRED WIRING, CONNECTIONS AND STRUCTURAL FASTENERS PER MANUFACTURER SPECIFICATIONS. VERIFY COMPACTOR MANUFACTURER PRIOR TO COMMENCEMENT
02 STONE VENEER
03 ARCHITECTURAL CAST STONE COLUMN CAP
04 ADA COMPLIANT SIDEWALK PER CIVIL
05 STAINLESS STEEL LATCH
06 GATE HINGE PIN, TYP. OF 3 PER GATE
07 FLOOR SLAB : 6" THICK HEAVY DUTY CONCRETE SLAB PER STRUCTURAL; BRUSHED FINISH
08 ALUMINUM LOUVERS; PROVIDE INTERMEDIATE SUPPORTS AND ATTACH TO FRAME AS REQUIRED
09 RAISED STUCCO BAND: SLOPE TOP OF WALL TO INSIDE
10 4"x1 3/4" ALUMINUM WELDED GATE FRAME
11 3/8" STEEL PLATE
12 URETHANE SEALANT
13 3/4"Ø ANCHOR BOLT, 6" MIN EMBED INTO FILLED CELL
14 8" GALVANIZED STEEL CONCRETE FILLED BOLLARD. REFER TO STRUCTURAL DRAWINGS FOR FOOTING REQUIREMENTS. REFER TO CIVIL FOR EXACT BOLLARD LOCATIONS AT GATES
15 CONCRETE APRON : EXTEND SLAB BEYOND ENCLOSURE . CONFIRM LENGTH WITH TRASH COMPACTOR VENDOR
16 24" GALVANIZED STL. CANE BOLT. PROVIDE SLOTS @ OPEN & CLOSED GATE POSITIONS
17 8" CMU WALL. STRUCK FLUSH & PAINTED ON INSIDE. COLOR PER OWNER, 5/8" PAINTED STUCCO FINISH ON OUTSIDE
18 (2) 5/4" FIBER CEMENT TRIM BLOCKING
19 FULLY MORTAR BRICK CELLS AND THE JOINT BETWEEN THE CMU

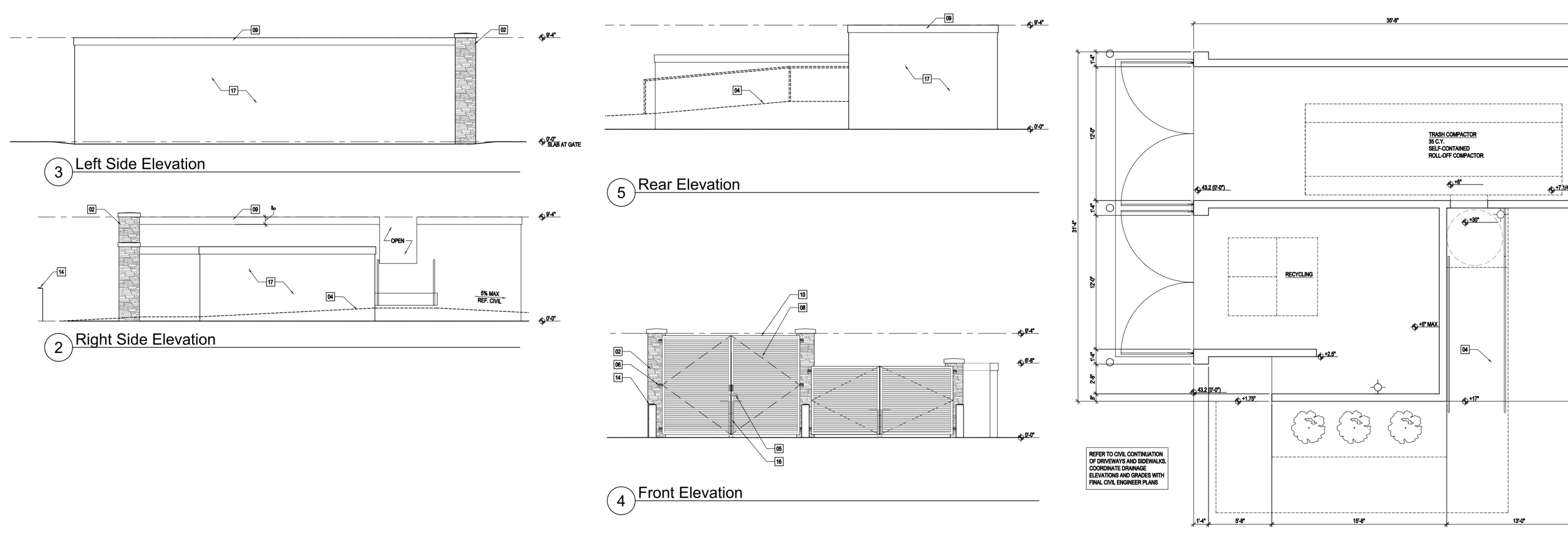

DUMPSTER ENCLOSURE DETAIL

NTS

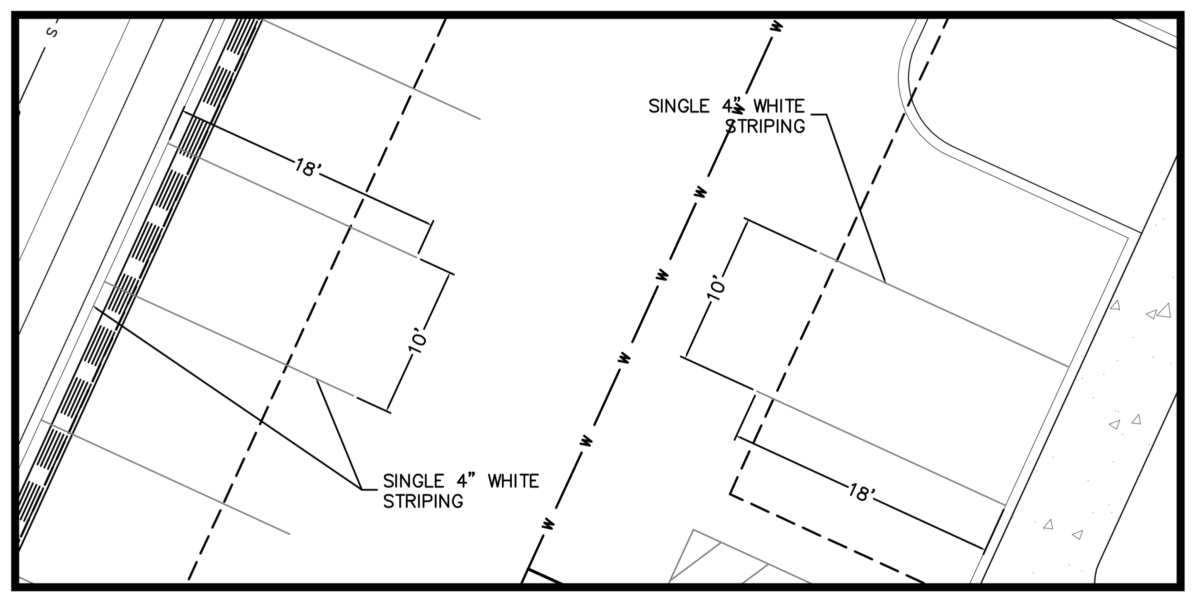

STANDARD PARKING DETAIL

NTS

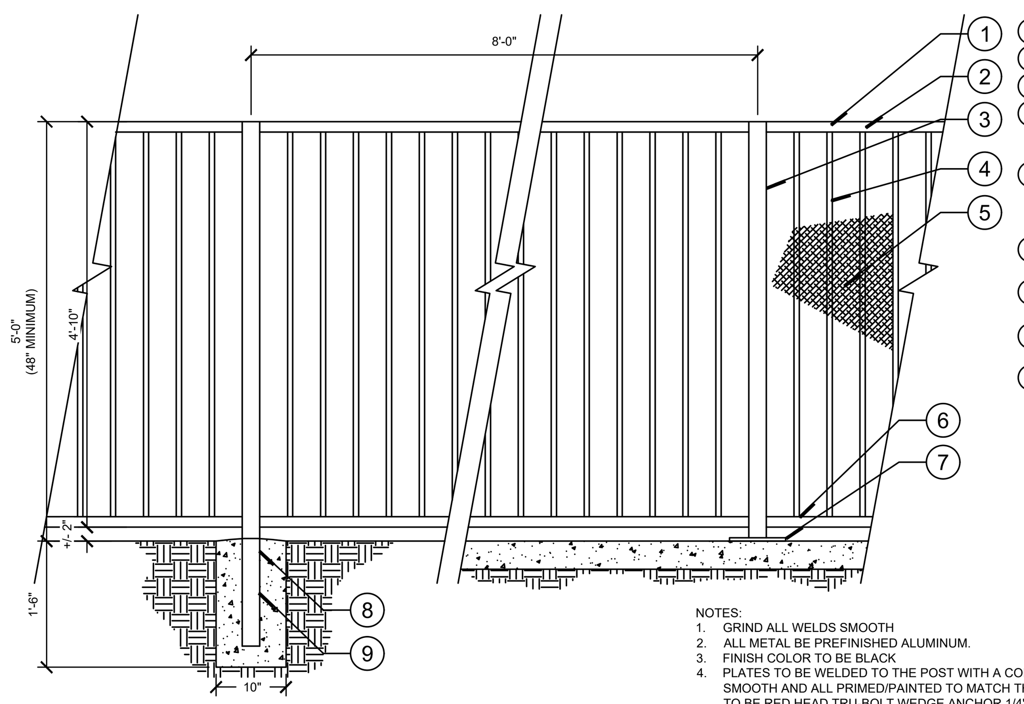

1. TOP OF FENCE TO BE LEVEL
2. 1 1/2" TUBE ALUMINUM TOP RAIL
3. 3" SQ. TUBE ALUMINUM POST
4. 3/4" SQ. TUBE ALUMINUM PICKETS (SPACING NOT TO EXCEED 4" O.C.)
5. PERFORATED ALUMINUM PANEL TO PREVENT REACH THROUGH (FLUSH FINISH PAINT TO MATCH FENCE)
6. 1 1/2" TUBE ALUMINUM BOTTOM RAIL
7. 4"x4"x1/4" ALUMINUM PLATE & ANCHOR SYSTEM, SEE NOTES
8. EXTEND POST INTO FOOTING, TYP.
9. 10" DIA. CONC. FOOTING, SHAPE TOP TO SHED WATER AWAY FROM POST

NOTES:
1. GRIND ALL WELDS SMOOTH
2. ALL METAL BE PREFINISHED ALUMINUM.
3. FINISH COLOR TO BE BLACK
4. PLATES TO BE WELDED TO THE POST WITH A CONTINUOUS 1/4" WELD GROUND SMOOTH AND ALL PRIMED/PAINTED TO MATCH THE FENCE. ANCHOR SYSTEM TO BE RED HEAD TRU-BOLT WEDGE ANCHOR 1/4" x 2 1/8" WW304S.S (OR APPROVED EQUAL)

POOL FENCE DETAIL

NTS

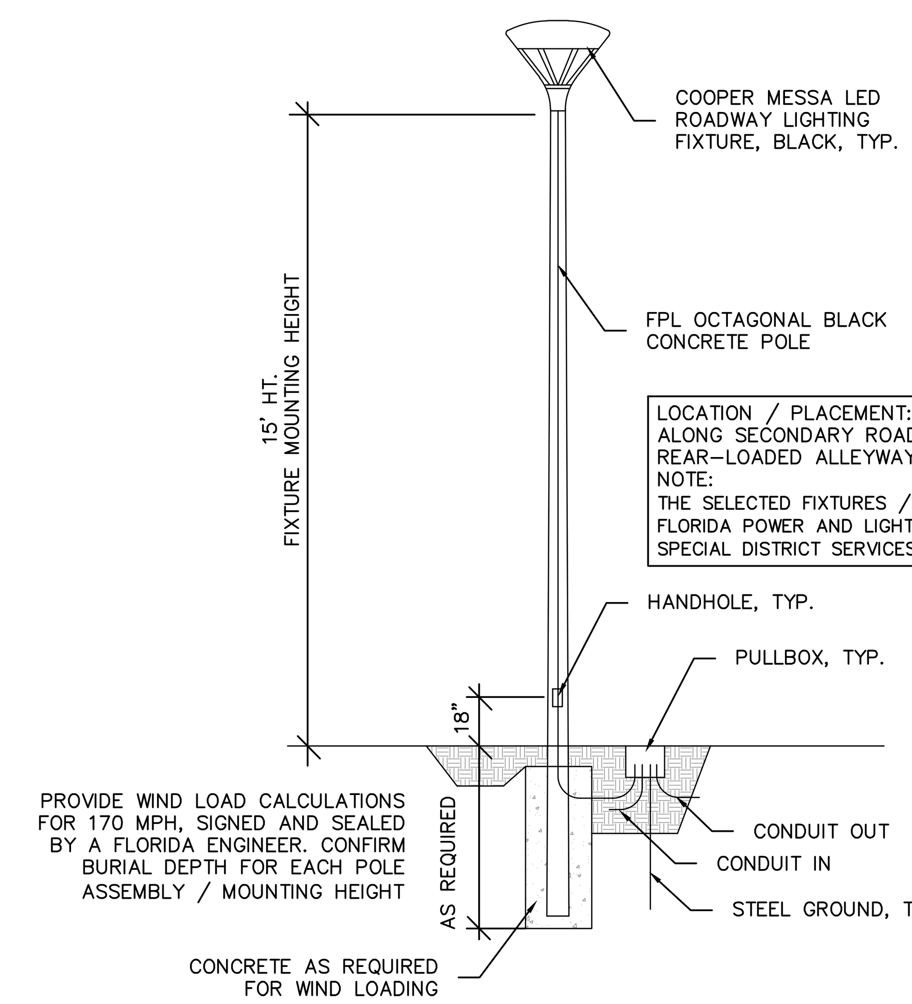

LOCATION / PLACEMENT:
ALONG SECONDARY ROADWAYS AND REAR-LOADED ALLEYWAYS
NOTE:
THE SELECTED FIXTURES / HEIGHTS ARE FLORIDA POWER AND LIGHT (FPL) AND TRADITION SPECIAL DISTRICT SERVICES (SDS) APPROVED.

SITE LIGHTING DETAIL

NTS

Invue

Catalog #		Type
Project		
Comments		Date
Prepared by		

DESCRIPTION

The geometric form of MESA LED luminaire allows it to adapt to either contemporary or traditional architectural settings. Available in single or twin pole mount configurations with optional wall mounting capability, the MESA LED luminaire's mounting options allow for harmonized site design whether at the entryway or in the parking lot. UL/cUL listed for use in wet locations.

SPECIFICATION FEATURES

Construction
HOUSING: Die-cast aluminum main housing and spider mount base maintain a minimum 0.125 wall thickness. Integral aluminum heat sink provides superior thermal heat transfer in +40°C ambient environments. DOOR ASSEMBLY: Top mounted, heavy wall, die-cast aluminum door maintains a nominal 0.125 thickness. Door includes a self-retaining interior hinge. GASKET: Continuous silicone gasket provided to seal housing door assembly and optic tray. LENS: Downlight lens is LED board integrated acrylic over-optics, each individually sealed for IP66 rating. HARDWARE: Four iinset fasteners on underside of housing provide access to luminaire interior. Concealed, stainless steel four bar hinge lock allows door to lock in the open position.

Optics
Choice of twelve patented, high-efficiency AccuLED Optic™ technology manufactured from injection-molded acrylic. Optics are precisely designed to shape the light output, maximizing efficiency and application spacing. AccuLED Optic technology, creates consistent distributions with the scalability to meet customized application requirements. Offered Standard in 4000K (+/- 275K) CCT and minimum 70 CRI. Optional 3000K CCT and 5000K CCT. For the ultimate level of spill light control, an optional house-side shield accessory can be field or factory installed. The house-side shield is designed to seamlessly integrate with the SL2, SL3 or SL4 optics. LightBAR optic tray is removable and able to rotate 360° in 90° increments for specific placement of the distribution relative to fixture.

Electrical
LED drivers mount to die-cast aluminum back housing for optimal heat sinking, operation efficacy, and prolonged life. Standard drivers feature electronic universal voltage (120-277V 50/60Hz), 347V 60Hz or 480V 60Hz operation, greater than 0.9 power factor, less that 20% harmonic distortion, and is suitable for operation in -40°C to 40°C ambient environments. All fixtures are shipped standard with 10kV/10kA common – and differential – mode surge protection. LightBARs feature and IP66 enclosure rating and maintain greater than 95% lumen maintenance at 60,000 hours per IESNA TM-21. Occupancy sensor and dimming options available.

Mounting
Fitter assembly mounts over 3" O.D. tenon and is secured via three concealed stainless steel set screws. Design of fitter provides seamless transition to 4" round poles. Additional mounting accessories include a dual fixture post top mounting arm and wall mount arm.

Finish
Housing is finished in five-stage super TGIC polyester powder coat paint, 2.5 mil nominal thickness for superior protection against fade and wear. LightBAR™ cover plates are standard white and may be specified to match finish of luminaire housing. Standard colors include black, bronze, grey, white, dark platinum and graphite metallic. RAL and custom color matches available. Consult Outdoor Architectural Colors brochure for a complete selection.

Warranty
Five-year warranty.

MSA MESA LED

1-6 LightBARs
Solid State LED

DECORATIVE LUMINAIRE

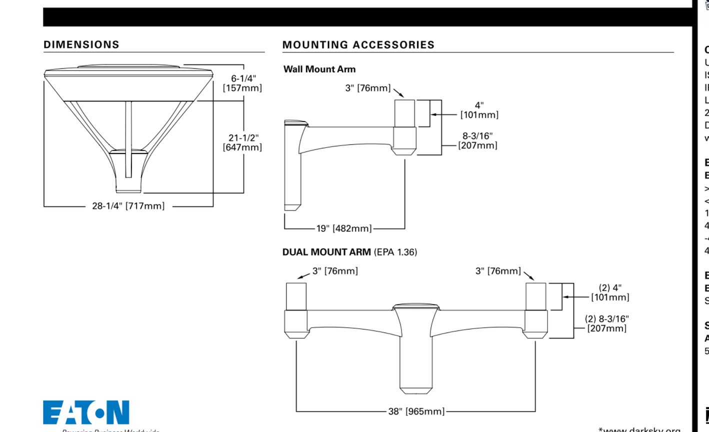

CERTIFICATION DATA
UL/cUL Listed
ISO 9001
IP66 LightBARs
LM79 / LM80 Compliant
2G Vibration Tested
Dark Sky Approved* (3000K CCT and warmer only)

ENERGY DATA
Electronic LED Driver
>0.9 Power Factor
<20% Total Harmonic Distortion
120-277V/50 & 60Hz, 347V/60Hz, 480V/60Hz
-40°C Minimum Temperature
40°C Ambient Temperature Rating

EPA
Effective Projected Area: (Sq. Ft.)
Single Mount 1.1

SHIPPING DATA
Approximate Net Weight:
50 lbs. (22.7 kgs.)

EATON
Powering Business Worldwide

*www.darksky.org

TD516001EN
May 15, 2019 10:03 AM

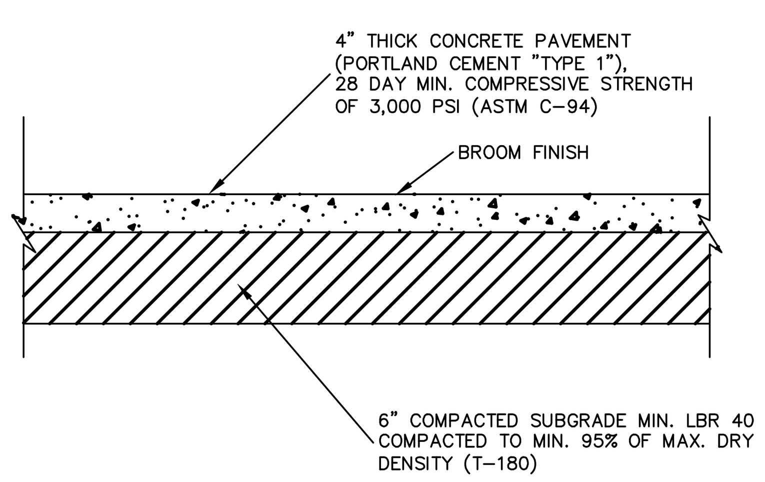

CONCRETE SIDEWALK DETAIL

NTS

SIDEWALK NOTES:
1. ALL CONCRETE SIDEWALKS SHALL BE CONSTRUCTED PER FDOT DESIGN INDEX #310.

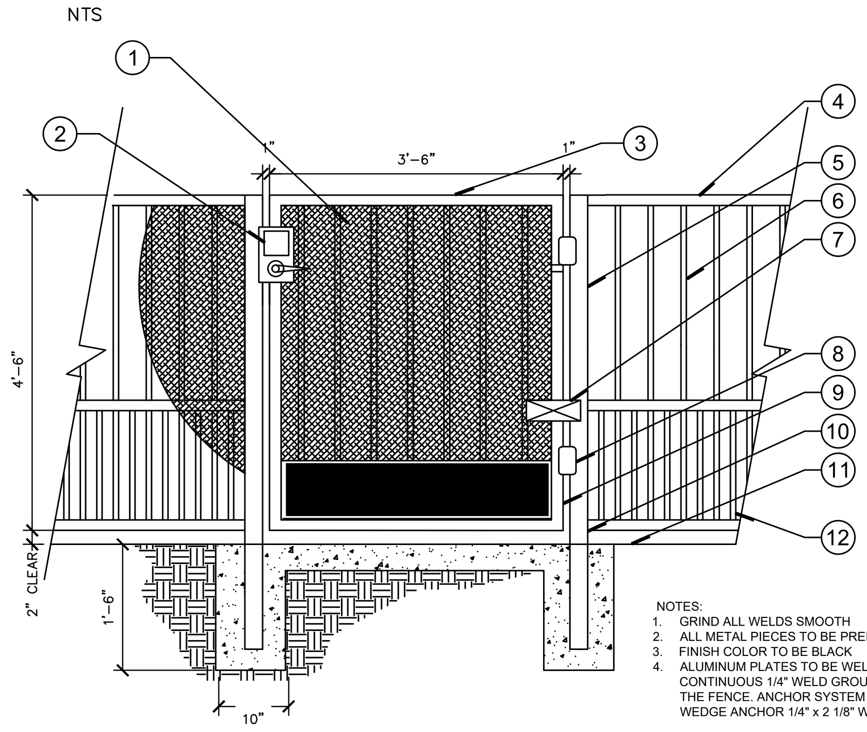

1. PERFORATED ALUMINUM PANEL TO PREVENT REACH THROUGH (FLUSH FINISH PAINT TO MATCH FENCE)
2. SIMPLEX L1021 LEVER MECHANICAL PUSHBUTTON LOCK KEY BYPASS
3. TOP OF FENCE TO BE LEVEL WITH FENCE
4. 1 1/2" TUBE ALUMINUM RAIL, TOP & BOTTOM
5. 3" SQ. TUBE ALUMINUM POST
6. 3/4" SQ. TUBE ALUMINUM PICKETS
7. LOCINOX MAMMOTH-180 HINGE/CLOSER BY: LOCINOX 877 562 4669
8. (2) SELF CLOSING HINGES (TYP.)
9. 1 1/2" SQ. TUBULAR ALUMINUM GATE FRAME
10. SET POST IN CONC. FOOTING
11. FINISH GRADE
12. PUPPY PANEL

NOTES:
1. GRIND ALL WELDS SMOOTH
2. ALL METAL PIECES TO BE PREFINISHED ALUMINUM
3. FINISH COLOR TO BE BLACK
4. ALUMINUM PLATES TO BE WELDED TO THE POST WITH A CONTINUOUS 1/4" WELD GROUND SMOOTH AND ALL TO MATCH THE FENCE. ANCHOR SYSTEM TO BE RED HEAD TRU-BOLT WEDGE ANCHOR 1/4" x 2 1/8" WW304S.S (OR APPROVED EQUAL)

DOG PARK FENCE DETAIL

NTS

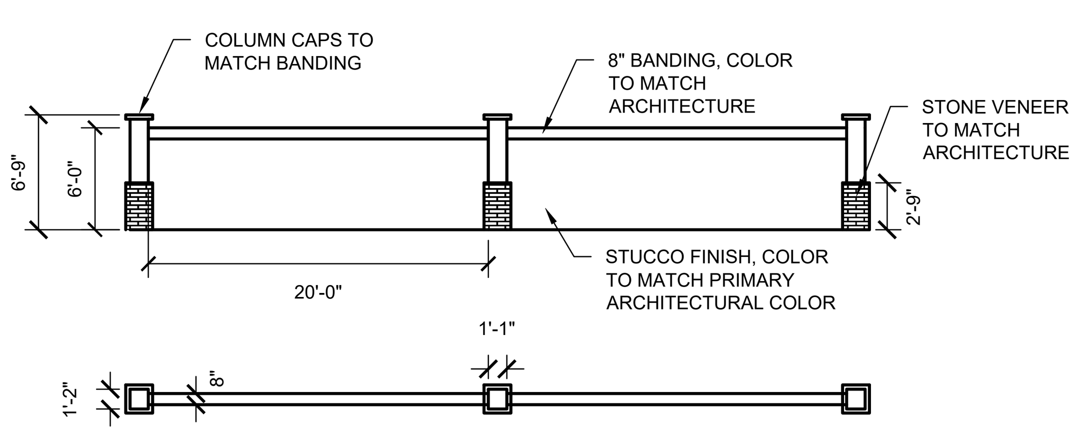

TYPICAL WALL ELEVATION

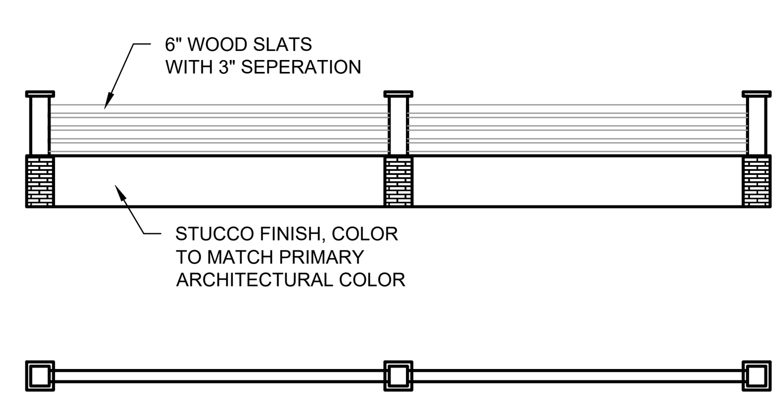

ACCENT WALL ELEVATION

PERIMETER WALL DETAIL

NTS

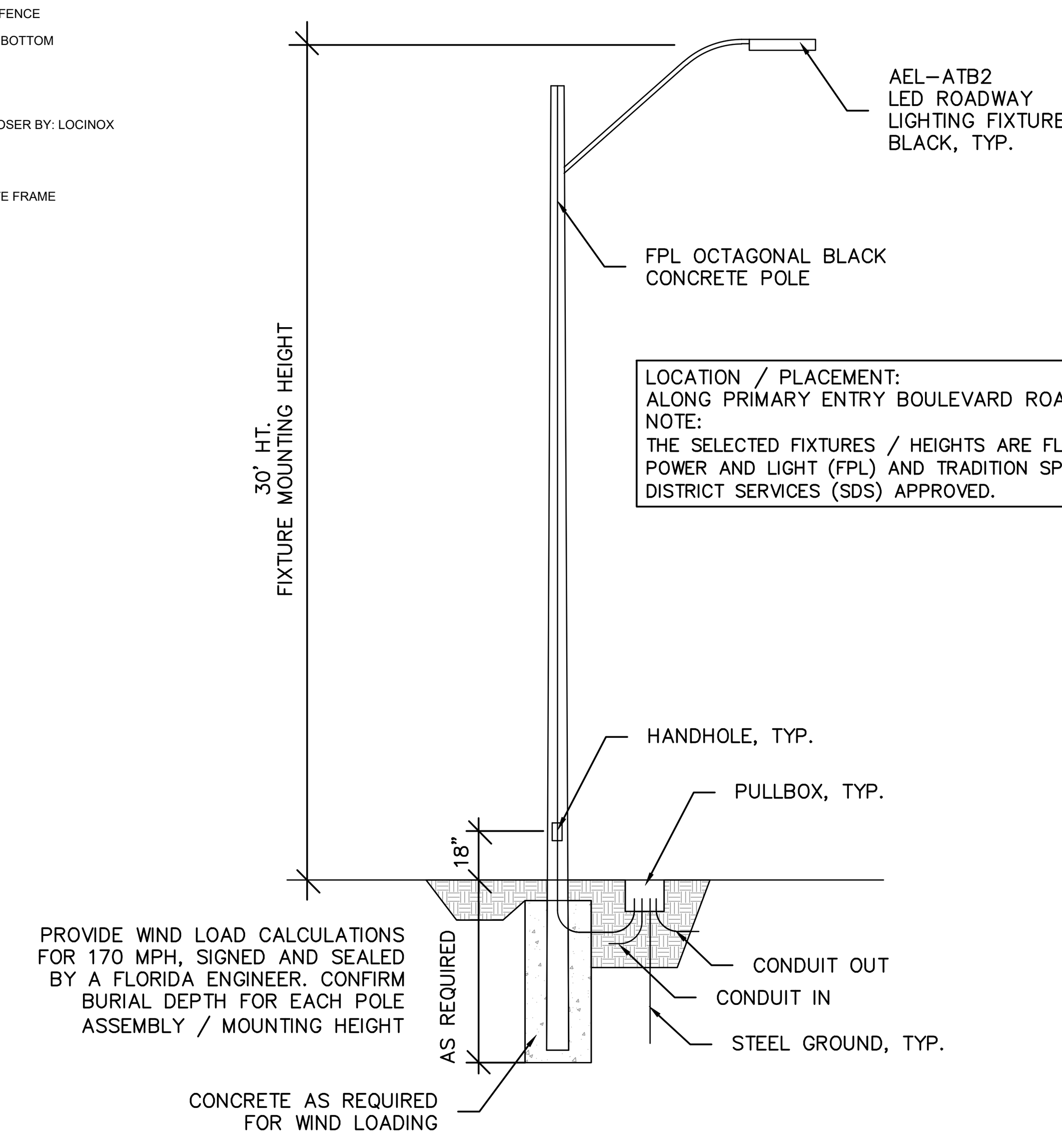

LOCATION / PLACEMENT:
ALONG PRIMARY ENTRY BOULEVARD ROADWAY ONLY
NOTE:
THE SELECTED FIXTURES / HEIGHTS ARE FLORIDA POWER AND LIGHT (FPL) AND TRADITION SPECIAL DISTRICT SERVICES (SDS) APPROVED.

SITE LIGHTING DETAIL

NTS

AEL American Electric Lighting

Autobahn ATB2

LED Roadway Luminaire

For more than 60 years, the American Electric Lighting name has been recognized for the highest quality and reliability in outdoor, utility and infrastructure lighting.

Designed to replace up to 400 watt HPS cobraheads, the virtually maintenance-free Autobahn ATB2 uses breakthrough LEDs and precision-engineered optics to provide exceptional illumination while also saving energy – typically 60% or more.

Plus, it works seamlessly with the Acuity Brands outdoor controls systems to maximize energy and maintenance savings through enhanced monitoring and control functions.

Lightweight, reliable and extremely efficient, the Autobahn Series is the definitive choice for roadway lighting renovation and improving sustainability in you infrastructure.

Key Selling Points
- High performance energy efficient solution for high speed roadways, highway access ramps, and area lighting applications
- 40-60% more efficient than comparable HID luminaires
- Sleek attractive dayform with weight and EPA less than comparable cobraheads
- Leading-edge optics improve visibility on roadways
- Nighttime Friendly™
- Tool-less features
- Designed to operate at 40°C ambient
- Best-in-class surge protection and efficacy (lpw)
- **Municipalities:** Energy efficiency and holistic longevity make it the ultimate sustainable solution for renovating legacy streetlights
- **Utilities:** Lineman-friendly features make it easy to install; its long, reliable operating life reduces the hassle of lighting grid maintenance (especially when paired with ROAM smart controls)

Quick Facts
- 250-400 watt HPS replacement
- ANSI 20kV/10kA Surge Protection
- Weight~21 lbs
- Types 2, 3, 4, & 5 Distributions
- 3000K, 4000K & 5000K CCT, 70CRI minimum
- ROAM Compatible
- Removable "Power Door" standard

Applications
- Municipal Streets and Public Roadways
- Residential Areas
- Campuses
- Military Bases
- Industrial Parks
- Hotels and Resorts
- Municipal Parks
- Recreation Centers

AcuityBrands

PSLUSD PROJECT NO. 5355
CITY OF PSL PROJECT NO. 20-039 A-1

No.	REVISIONS	DATE	BY

Kimley»Horn
© 2020 KIMLEY-HORN AND ASSOCIATES, INC.
189 S. ORANGE AVENUE, SUITE 1000, ORLANDO, FL 32801
PHONE: 407-898-1511
WWW.KIMLEY-HORN.COM CA 00000696

LICENSED PROFESSIONAL
BROOKS A. STICKLER, P.E.
FLORIDA LICENSE NUMBER 74031
DATE: 2020

KHA PROJECT 149948001
DATE 11/24/2020
SCALE AS SHOWN
DESIGNED BY ST
DRAWN BY ST
CHECKED BY BAS

SITE PLAN DETAILS

AMERICA WALKS

CITY OF PORT ST. LUCIE FLORIDA

SHEET NUMBER
C1.6

Plotted By: Rivera, Jeffrey Sheet Set: AMERICA WALKS Layout: C1.6 November 25, 2020 11:20:50am K:\ORL_Civil\149948001-America Walks\CADD\DEVELOPMENT\Correct Site Plan\2020-04-02 - CORRECT FILES 2020\PlanSheets\C1.0 - SITE PLAN.dwg
This document, together with the concepts and designs presented herein, as an instrument of service, is intended only for the specific purpose and client for which it was prepared. Reuse of and improper reliance on this document without written authorization and adaptation by Kimley-Horn and Associates, Inc. shall be without liability to Kimley-Horn and Associates, Inc.