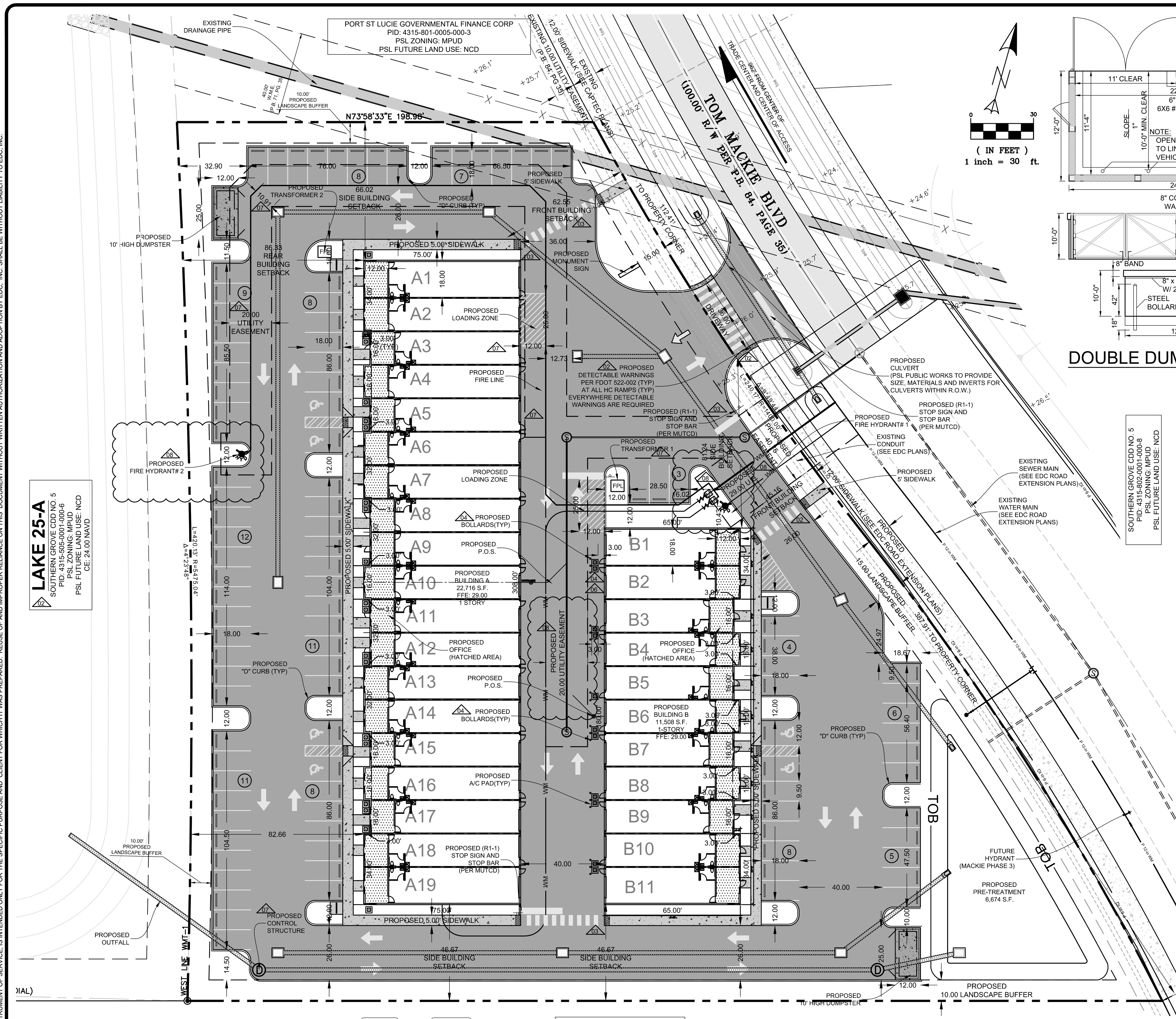

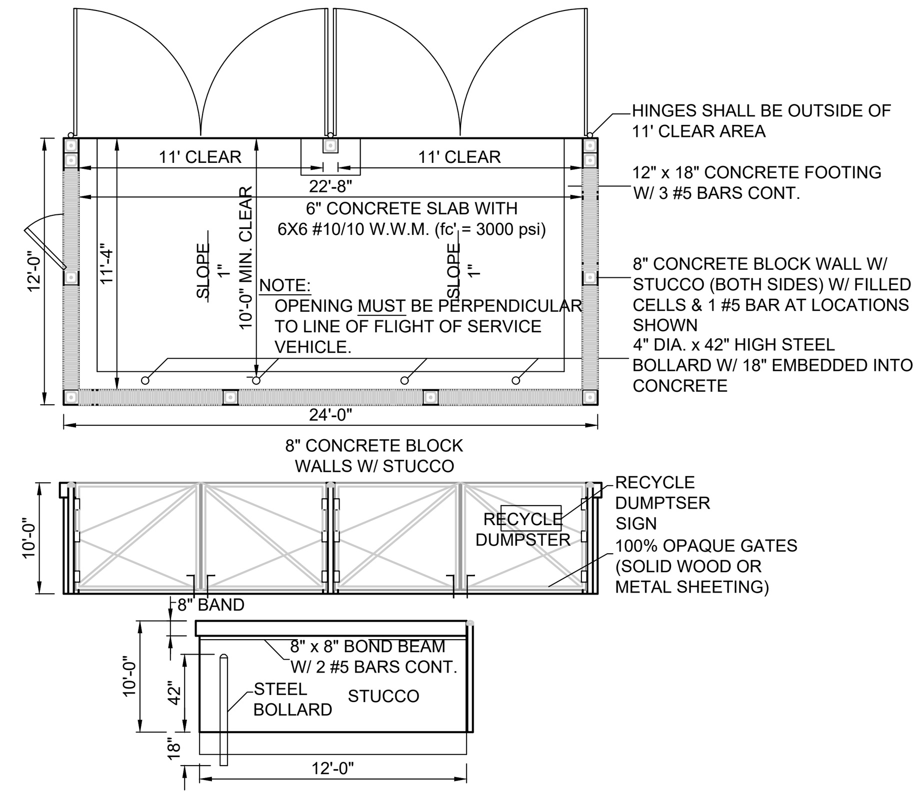

DOUBLE DUMPSTER DETAIL

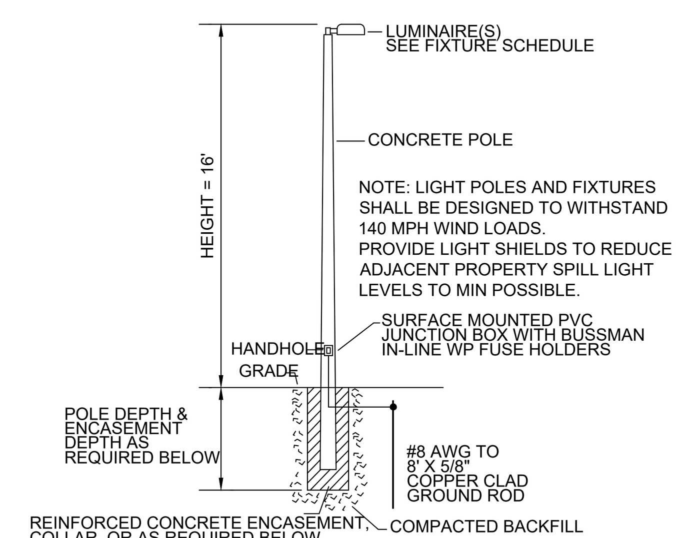

POLE MOUNTING DETAIL

N.T.S.

NOTE: PROVIDE SHOP DRAWINGS SIGNED AND SEALED BY A FLORIDA REGISTERED PROFESSIONAL ENGINEER. SHOP DRAWINGS SHALL INCLUDE THE POLE, LUMINAIR, AND REINFORCED CONCRETE ENCASEMENT CALCULATIONS TO SHOW COMPLIANCE WITH FLORIDA BUILDING CODE , FOR WIND LOADING. SHOP DRAWINGS MAY BE FOR WORSE CASE SOIL CONDITIONS OR MAY BE BASED ON ACTUAL SITE SOIL BORINGS AND ANALYSIS FOR EACH POLE LOCATION AS VERIFIED BY THE FLORIDA REGISTERED PROFESSIONAL ENGINEER AND DOCUMENTED IN THE SHOP DRAWINGS. ALL ASSOCIATED COSTS FOR THE TOTAL INSTALLATION INCLUDING SHOP DRAWINGS, SOIL TESTING AND DESIGN FEES SHALL BE INCLUDED IN THE CONTRACT.

TRAFFIC STATEMENT: (05)

THE INSTITUTE OF TRANSPORTATION ENGINEERS (ITE), TRIP GENERATION, 11TH EDITION, LAND USE CODE (150) WAREHOUSING AND (710) GENERAL OFFICE BUILDING WAS USED TO DETERMINE EXPECTED TRIP GENERATION RATES FOR THE PROPOSED PROJECT. THE TOTAL SQUARE FOOTAGE FOR THE BUILDING WAS USED TO OBTAIN THE FOLLOWING RESULTS:

TOTAL BUILDING SQUARE FOOTAGE: 34,224 S.F.
WAREHOUSING: 28,976 S.F.
OFFICE: 5,248 S.F.

AVERAGE DAILY TRIPS:
WAREHOUSING (150) = 84 TRIPS (42 ENTRY-42 EXIT)
GENERAL OFFICE BUILDING (710) = 89 TRIPS (45 ENTRY-44 EXIT)

AM PEAK HOUR TRIPS:
WAREHOUSING (150) = 32 TRIPS (21 ENTRY-11 EXIT)
GENERAL OFFICE BUILDING (710) = 13 TRIPS (11 ENTRY-2 EXIT)

PM PEAK HOUR TRIPS:
WAREHOUSING (150) = 25 TRIPS (6 ENTRY-19 EXIT)
GENERAL OFFICE BUILDING (710) = 14 TRIPS (2 ENTRY-12 EXIT)

STORMWATER DRAINAGE BASIN INFORMATION (01)

SOUTHERN GROVE-BASIN B (ERP#56-02531-P)
CONTROL ELEVATION = 25.50 NGVD (24.00 NAVD)
MIN ROAD CROWN ELEVATION = 28.50 NGVD (27.00 NAVD)
MIN FINISHED FLOOR ELEVATION = 30.00 NGVD (28.50 NAVD)

VERTICAL DATUM NOTE:
ELEVATIONS SHOWN HEREON ARE RELATIVE TO THE NORTH AMERICAN VERTICAL DATUM OF 1988 (N.A.V.D.88) AND ARE GIVEN IN U.S. SURVEY FEET UNLESS OTHERWISE NOTED.
*GENERAL ACCEPTED CONVERSION: NAVD + 1.475 = NGVD

NOTE:
THE PROPERTY OWNER, CONTRACTOR AND AUTHORIZED REPRESENTATIVES SHALL PROVIDE PICKUP, REMOVAL AND DISPOSAL OF LITTER WITHIN THE PROJECT LIMITS AND SHALL BE RESPONSIBLE FOR MAINTENANCE OF THE AREA FROM THE EDGE OF PAVEMENT TO THE PROPERTY LINE WITHIN THE CITY'S RIGHT-OF-WAY IN ACCORDANCE WITH CITY CODE, SECTION 41.08(G).

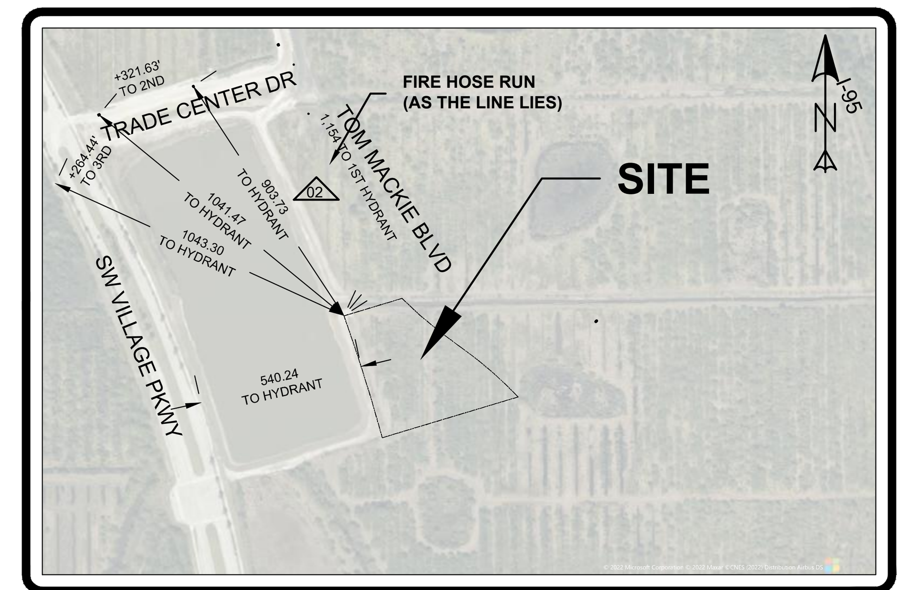

VICINITY MAP

SCALE: 1:500

SITE DATA
LEGAL DESCRIPTION (06)
SOUTHERN GROVE PLAT NO. 41 (PB 104-14) LOT 4A (3.20 AC - 139,392 SF)

PARCEL ID #: (01)	4322-500-0001-000-3
PROJECT NAME:	TRADITION BUSINESS CENTER
OWNER: (01)	TRADITION BUSINESS CENTER LLC 1935 COMMERCE LN STE 5 JUPITER, FL 33458
FUTURE LAND USE:	NCD
ZONING:	MPUD

BUILDING DATA

GROSS SQUARE FOOTAGE	34,224 S.F.	
PROPOSED BUILDING A	22,716 S.F.	(19 UNITS)
WAREHOUSE	19,392 S.F.	
OFFICES	3,324 S.F.	
PROPOSED BUILDING B	11,508 S.F.	(11 UNITS)
WARHOUSE	9,584 S.F.	
OFFICES	1,924 S.F.	

ZONING CODE FOR: MASTER PLANNED UNIT DEVELOPMENT (MPUD) **FFE:29.00**

	YARD SETBACKS FRONT	REAR	SIDE	CORNER	BUILDING COVERAGE	BUILDING HEIGHT	OPEN SPACE (LANDSCAPING)
PER CODE	25'	10'	10'	20'	50% MAX.	50' MAX.	10% MIN.
PROPOSED	46' MIN.	86' MIN.	36' MIN.	----	24.25%	18' -1 STORY	--.--%

SITE USE DATA	**141,134.00 S.F.**	**3.24 AC**	**100.00%**
IMPERVIOUS DATA	105,521.00 S.F.	2.42 AC	74.77%
PROPOSED BUILDINGS	34,224.00 S.F.	0.79 AC	24.25%
PROPOSED ASPHALT	66,394.00 S.F.	1.52 AC	47.04%
PROPOSED CONCRETE	4,903.00 S.F.	0.11 AC	3.47%
PERVIOUS DATA	35,613.00 S.F.	0.82 AC	25.23%
OPEN SPACE	28,939.00 S.F.	0.66 AC	20.50%
PROPOSED STORMWATER	6,674.00 S.F.	0.15 AC	4.73%

PROVIDER OF UTILITIES:
WATER: PSLUSD
WASTEWATER: PSLUSD
IRRIGATION: WELL
SOLID WASTE: WASTE PRO

PARKING DATA (01)
(PER:SOUTHERN GROVE MPUD)

PARKING REQUIRED

FLEX	(28,976 S.F @ 1 SPACE(S)/500 S.F.)	= 58 SPACES
OFFICES	(5,248 S.F. @ 4 SPACE(S)/200 S.F.)	= 27 SPACES
TOTAL REQUIRED PARKING		= 85 SPACES

PARKING PROVIDED
PROPOSED PARKING = 100 SPACES
(6 HANDICAP SPACES INCLUDED)

DRAINAGE STATEMENT (01) (02)
STORMWATER WILL BE COLLECTED VIA A SERIES OF INLETS THAT WILL DRAIN INTO A DRY DETNTION AREA WHERE THE REQUIRED 1/2" OF DRY PRE-TREATMENT WILL BE ACHEIVED PRIOR TO A CONTROLLED DISCHARGED TO THE SOUTHERN GROVE CDD OWNED AND MAINTEAINED LAKE L25A JUST TO THE PROPERTY'S WEST.

SOLID WASTE:
BASED ON THE INTENDED USE OF THE BUILDING, THIS PROJECT WILL UTILIZE A PROPOSED DUMPSTER AREA FOR SOLID WASTE AND RECYCLABLE ITEMS.

HAZARDOUS WASTE:
ALL HAZARDOUS WASTES DISPOSAL SHALL COMPLY WITH ALL FEDERAL, STATE AND LOCAL REGULATIONS.

FIRE PROTECTION:
EXISTING FIRE HYDRANTS ARE SHOWN ON THE PLAN VIEW WITHIN 1,000 FEET

LIGHTING NOTES:
ALL LIGHTING, TO INCLUDE POLE HEIGHTS SHALL BE IN CONFORMANCE WITH THE TRADITION COMMERCE PARK MPUD REQUIREMENTS FOR LIGHTING.

LANDSCAPE:
LANDSCAPE TO BE PROVIDED BY OTHERS.

ENVIRONMENTAL:
AN ENVIRONMENTAL ASSESSMENT WILL BE SUBMITTED DURING THE CONSTRUCTION APPLICATION AND PRIOR TO CONSTRUCTION.

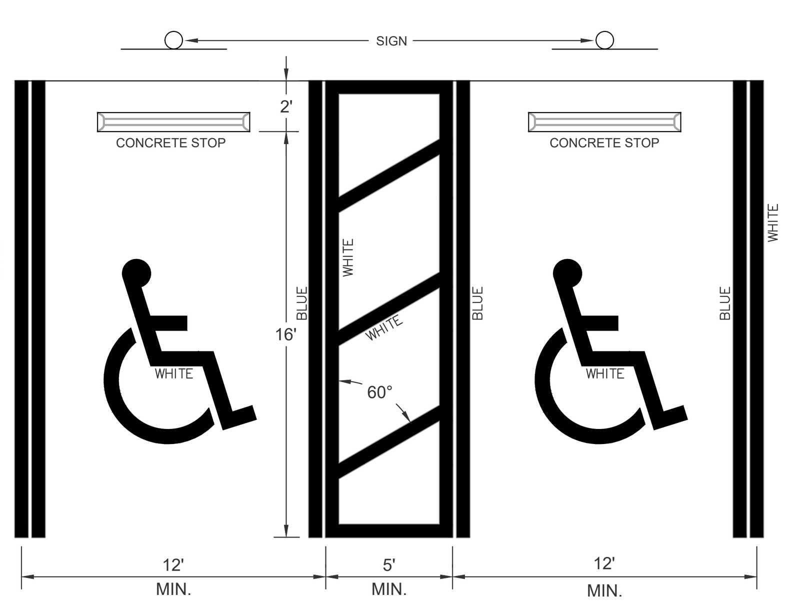

CITY OF PORT ST. LUCIE HANDICAPPED SPACE DETAIL

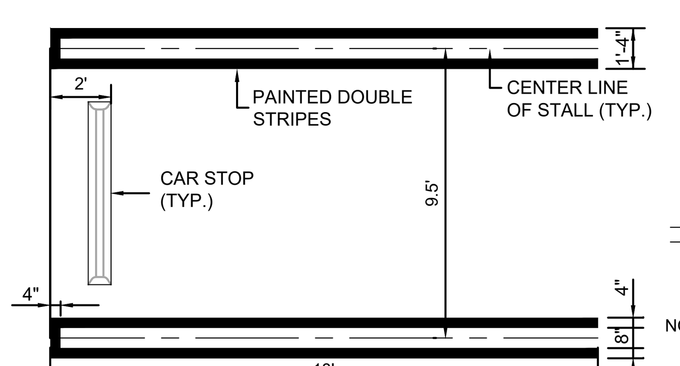

TYPICAL 18' PARKING STALL

1" = 5'

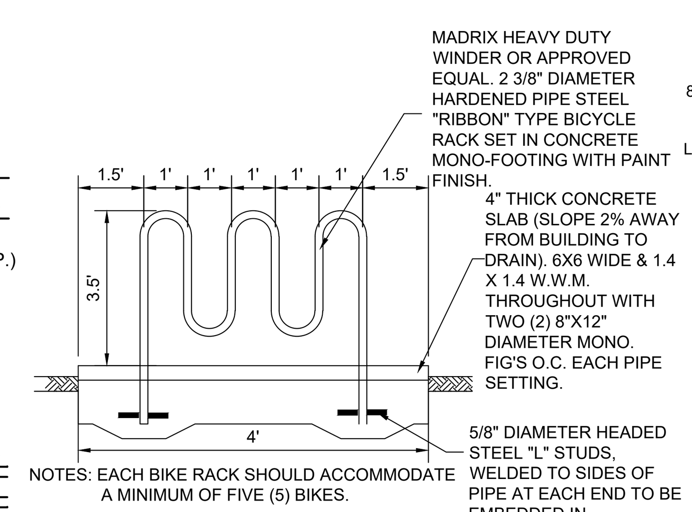

TYPICAL BIKE RACK DETAIL

N.T.S.

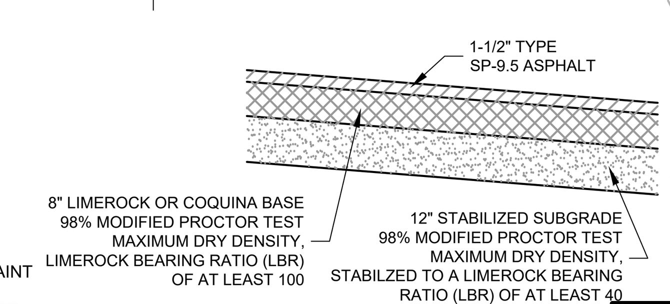

TYPICAL PAVEMENT SECTION

N.T.S.

811 It's fast. It's free. It's the law. Know what's **below.** **Call** before you dig. www.callsunshine.com

LEGEND

	EXISTING METER		EXISTING UTILITY POLE
	PROPOSED SIGN		PROPOSED DRAINAGE INLET
	PROPOSED MITERED END SECTION		EXIST. DRAINAGE INLET
	HANDICAP PARKING SYMBOL		EXISTING STREET LIGHT
	EXISTING CONCRETE		PROPOSED LIGHT POLE (SINGLE)
	EXISTING PAVEMENT		DRAINAGE FLOW ARROW
	PROPOSED CONCRETE		PROPOSED LIGHT POLE (DOUBLE)
	PROPOSED PAVEMENT	#	PARKING STALL COUNT
	PROPOSED AC PADS		EXISTING DRAINAGE
			PROPOSED DRAINAGE PIPE

PSL PROJECT # P22-007 PSLUSD PROJECT #5339A-1

ENGINEERS SURVEYORS ENVIRONMENTAL LAND PLANNERS INTERIOR DESIGNERS
10250 VILLAGE PARKWAY
SUITE 201
PORT ST. LUCIE, FL 34987
772-462-2455
www.edc-inc.com
F.B.P.E. CERTIFICATE OF AUTHORIZATION 9935
L.B. CERTIFICATE OF AUTHORIZATION 8098

DESIGNED BY	JJL
DRAWN BY	JJL
FILENAME	21-469 george r13.dwg
LAYOUT	SP
SCALE	AS SHOWN
DATE	15DECEMBER2022

DATE		REVISION COMMENTS
12-15-22	08	RESPONSE TO PUBLIC WORKS DEPT. (MELISSA PERRY/DIANA SPRIGGS)
12-01-22	07	RESPONSE TO CITY COUNCIL COMMENTS(U.E., TRANSFORMER, LABELS...)
11-17-22	06	LEGAL UPDATED (BRIDGET KEAN)
11-17-22	05	REVISIONS PER PUBLIC WORKS COMMENT
11-07-22	05	REVISIONS TO THE TRAFFIC STATEMENT
10-06-22	04	A/C PADS RELOCATED TO REAR OF THE BUILDING B
04-13-22	03	RESPONSE TO PUBLIC WORKS COMMENTS
03-24-22	02	RESPONSE TO PSLUSD AND PUBLIC WORKS COMMENTS
02-03-22	01	RESPONSE TO PSLUSD COMMENTS

TRADITION BUSINESS CENTER

SITE PLAN

PORT SAINT LUCIE FLORIDA

10250 SW VILLAGE PARKWAY - SUITE 201
PORT SAINT LUCIE, FL 34987
772-462-2455

21-469

THIS DOCUMENT, TOGETHER WITH THE CONCEPTS AND DESIGNS PRESENTED HEREIN, AS AN INSTRUMENT OF SERVICE, IS INTENDED ONLY FOR THE SPECIFIC PURPOSE AND CLIENT FOR WHICH IT WAS PREPARED. REUSE OF AND IMPROPER RELIANCE ON THIS DOCUMENT WITHOUT WRITTEN AUTHORIZATION AND ADOPTION BY EDC, INC. SHALL BE WITHOUT LIABILITY TO EDC, INC.

Z:\EDC-2021\21-469 - Kelly - Tradition Business Center\ENGINEERING\AutoCAD\DWGs\21-469 George R13.dwg, SP, 12/15/2022 2:45:50 PM, James, EDC, Inc., EDC, Inc.