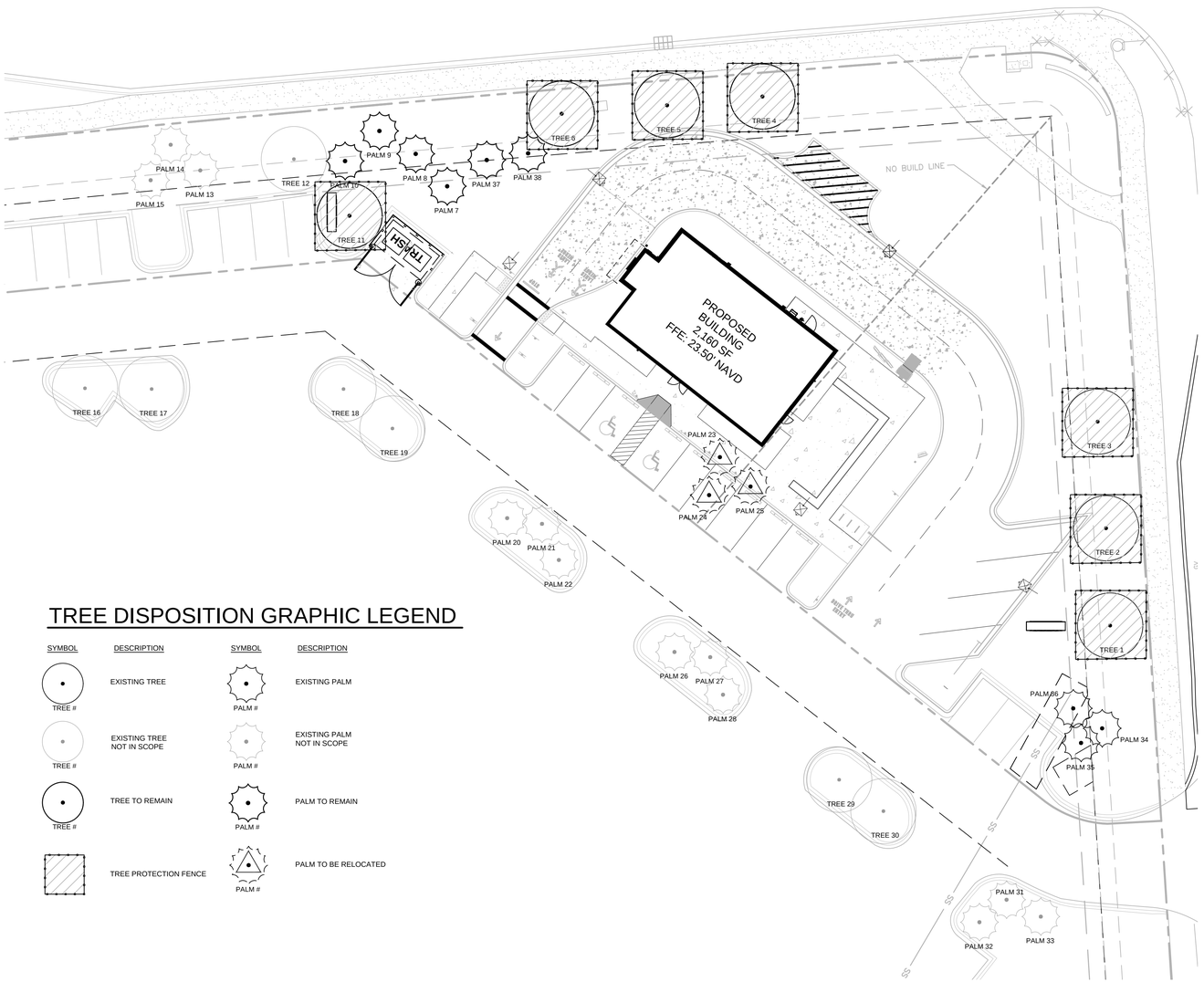

TREE DISPOSITION LIST

KHA TREE NO.		SCIENTIFIC NAME	COMMON NAME	DBH (In.)	HEIGHT (FT.)	CANOPY (FT.)	DISPOSITION	MITIGATION(SQFT.)
1		*Quercus virginiana*	Southern Live Oak	16"	20'	25'	Remain	NA
2		*Quercus virginiana*	Southern Live Oak	14"	20'	25'	Remain	NA
3		*Quercus virginiana*	Southern Live Oak	12"	20'	25'	Remain	NA
4		*D*	Southern Live Oak	12"	20'	25'	Remain	NA
5		*Quercus virginiana*	Southern Live Oak	12"	20'	25'	Remain	NA
6		*Quercus virginiana*	Southern Live Oak	12"	20'	25'	Remain	NA
7		*Sabal Palmetto*	Sabal Palm	14"	20'	10'	Remain	NA
8		*Sabal Palmetto*	Sabal Palm	14"	20'	10'	Remain	NA
9		*Sabal Palmetto*	Sabal Palm	14"	20'	10'	Remain	NA
10		*Sabal Palmetto*	Sabal Palm	14"	20'	10'	Remain	NA
11		*Quercus virginiana*	Southern Live Oak	12"	20'	25'	Remain	NA
12		*Quercus virginiana*	Southern Live Oak	12"	20'	25'	Remain	NA
13		*Washingtonia robusta*	Mexican Fan Palm	16"	30'	10'	Remain	NA
14		*Washingtonia robusta*	Mexican Fan Palm	16"	30'	10'	Remain	NA
15		*Washingtonia robusta*	Mexican Fan Palm	16"	30'	10'	Remain	NA
16		*Quercus virginiana*	Southern Live Oak	12"	20'	25'	Remain	NA
17		*Quercus virginiana*	Southern Live Oak	12"	20'	25'	Remain	NA
18		*Quercus virginiana*	Southern Live Oak	12"	20'	25'	Remain	NA
19		*Quercus virginiana*	Southern Live Oak	12"	20'	25'	Remain	NA
20		*Washingtonia robusta*	Mexican Fan Palm	14"	30'	10'	Remain	NA
21		*Washingtonia robusta*	Mexican Fan Palm	14"	30'	10'	Remain	NA
22		*Washingtonia robusta*	Mexican Fan Palm	14"	30'	10'	Remain	NA
23		*Washingtonia robusta*	Mexican Fan Palm	16"	30'	10'	**Relocate**	NA
24		*Washingtonia robusta*	Mexican Fan Palm	16"	30'	10'	**Relocate**	NA
25		*Washingtonia robusta*	Mexican Fan Palm	16"	30'	10'	**Relocate**	NA
26		*Washingtonia robusta*	Mexican Fan Palm	14"	30'	10'	Remain	NA
27		*Washingtonia robusta*	Mexican Fan Palm	14"	30'	10'	Remain	NA
28		*Washingtonia robusta*	Mexican Fan Palm	14"	30'	10'	Remain	NA
29		*Quercus virginiana*	Southern Live Oak	12"	20'	25'	Remain	NA
30		*Quercus virginiana*	Southern Live Oak	12"	20'	25'	Remain	NA
31		*Washingtonia robusta*	Mexican Fan Palm	16"	30'	10'	Remain	NA
32		*Washingtonia robusta*	Mexican Fan Palm	16"	30'	10'	Remain	NA
33		*Washingtonia robusta*	Mexican Fan Palm	16"	30'	10'	Remain	NA
34		*Washingtonia robusta*	Mexican Fan Palm	16"	30'	10'	Remain	NA
35		*Washingtonia robusta*	Mexican Fan Palm	16"	30'	10'	Remain	NA
36		*Washingtonia robusta*	Mexican Fan Palm	16"	30'	10'	Remain	NA
37		*Wodyetia bifurcata*	Foxtail Palm	12"	10'	8'	Remain	NA
38		*Wodyetia bifurcata*	Foxtail Palm	12"	10'	8'	Remain	NA

Species, height, DBH and canopy to be confirmed by ISA Certified Arborist

N.I.S. = Not in Scope

TREE DISPOSITION INFORMATION IS BASED UPON SURVEY INFO DATED 4/10/23 ALONG WITH SITE OBSERVATIONS CONDUCTED 8/23/23

TREE DISPOSITION GRAPHIC LEGEND

SYMBOL	DESCRIPTION	SYMBOL	DESCRIPTION
TREE #	EXISTING TREE	PALM #	EXISTING PALM
TREE #	EXISTING TREE NOT IN SCOPE	PALM #	EXISTING PALM NOT IN SCOPE
TREE #	TREE TO REMAIN	PALM #	PALM TO REMAIN
	TREE PROTECTION FENCE	PALM #	PALM TO BE RELOCATED

CALL 48 HOURS BEFORE YOU DIG

IT'S THE LAW! DIAL 811

811 Know what's below. Call before you dig.

SUNSHINE STATE ONE CALL OF FLORIDA, INC.

THIS ITEM HAS BEEN DIGITALLY SIGNED AND SEALED BY KYLER DURHAM, PLA ON THE DATE ADJACENT TO THE SEAL. PRINTED COPIES OF THIS DOCUMENT ARE NOT CONSIDERED SIGNED AND SEALED AND THE SIGNATURE MUST BE VERIFIED ON ANY ELECTRONIC COPIES.

KYLER R. DURHAM ★ No LA6667668 ★ LICENSE ★ PROFESSIONAL LANDSCAPE ARCHITECT ★ STATE OF FLORIDA

DATE: 2024.12.03 14:41:24 -05'00'

No.	REVISIONS	DATE	BY

Kimley»Horn
© 2024 KIMLEY-HORN AND ASSOCIATES, INC.
445 24TH STREET, SUITE 200, VERO BEACH, FL 32960
PHONE: 772-794-4100
WWW.KIMLEY-HORN.COM REGISTRY NO. 35106

KHA PROJECT 047427053

DATE	08/05/2024
SCALE	AS SHOWN
DESIGNED BY	JC
DRAWN BY	JC
CHECKED BY	BVJ

TREE DISPOSITION

STARBUCKS CASHMERE

PREPARED FOR REGENCY

CITY OF PORT ST. LUCIE FLORIDA

PSL PROJ #: P24-148

SHEET NUMBER L-100

Plotted By:Durham, Kyler Sheet Set:STARBUCKS CASHMERE Layout:TREE DISPOSITION December 11, 2024 02:59:10pm K:\VRB_LDEV\Regency\Florida\cashmere starbucks\CAD\plansheets\L-100 TREE DISPOSITION.dwg
This document, together with the concepts and designs presented herein, as an instrument of service, is intended only for the specific purpose and client for which it was prepared. Reuse of and improper reliance on this document without written authorization and adaptation by Kimley-Horn and Associates, Inc. shall be without liability to Kimley-Horn and Associates, Inc.

TREE REMOVAL AND TREE TO REMAIN PRUNING SPECIFICATIONS

PART 1 - DEFINITIONS

A. Natural Resource - Existing trees or palms.
B. Critical Root Zone - The minimum volume of roots necessary to have for tree health and stability.
C. DBH - Diameter Breast High - Indicates the location on the trunk, approximately 4.5' above ground, to measure the diameter of a tree.
D. Preserved Trees - Trees that are to be saved/remain in place.
E. Owner's Representative - A representative, hired and paid for by the owner, that supervises the construction of the procedures shown on the tree disposition plans.
F. Tree Protection Zone (TPZ) - The area surrounding a tree defined by a specified distance, which excavation and other construction related activities should be avoided. The TPZ is variable depending on species, factors, age and health of the plant, soil conditions, and proposed construction.
G. Contractor's Certified Arborist - an independent ISA Certified Arborist, hired and paid for by the contractor, that supervises the construction of the procedures shown on the tree disposition plans.

PART 2 - TREE BARRIER

A. Tree Protector Barrier Material.
1. Six (6) foot tall wire mesh construction fence supported by eight (8) foot tall metal T-Bar Posts and Post Caps.
2. The tree protector barrier shall have a two (2) foot by two (2) foot "tree protection zone" sign affixed to the fence every twenty (20) feet placed in such a manner to be clearly visible to the construction workers. The sign must be made up of weather resistant material.
3. The eight (8) foot tall metal T-Bar Post and Post Cap shall be placed a maximum of six (6) foot intervals.

PART 3 - EXECUTION

A. If hazards are determined by qualified certified arborist in an individual tree then those hazards can be mitigated according to the specifications given by the Qualified Certified Arborist.
1. The tree disposition list. This item is to be coordinated by the Qualified Certified Arborist with the Owner's Representative.
2. All pruning shall be done in accordance with ANSI A300 (Part 1) Pruning and best management practices.
3. The Contractor's Certified Arborist shall be present during all pruning operations.

B. Root Pruning - Refer to Arborist Report
1. Trenching locations shall be approved in the field by the Owner's Representative and the Contractor's Certified Arborist.
2. All roots shall be cut by hand.
3. The trench shall be backfilled minus debris and large rocks, as directed by the Contractor's Certified Arborist.
4. Phased root pruning timeframes vary by species. Contractor's certified arborist shall direct pruning schedule.

C. Tree Protector Barrier
1. See detail in this sheet.
2. Tree Protector Barrier shall be placed by the Contractor around each tree to remain as directed by the Contractor's Certified Arborist.

D. Tree Removals
1. Contractor shall remove and discard all trees shown as "Remove" on the Tree Disposition Plan and the Tree Disposition List. Tree stump shall be ground below grade. Care shall be taken to not damage the existing trees marked to remain and their critical root zones shall not be compacted by equipment.
2. If Tree Protector Barrier is damaged, repair shall be performed immediately.
3. Contractor shall remove and haul away from the job site all wood generated from tree removals, including stumps, the same day the removal happens.
4. Burn pits are not allowed.

PART 4 - PENALTIES

A. Repair of Damaged Trees To Remain
1. If any damage to trees to remain or other natural resources should occur by accident or negligence during the construction period, shall be immediately inspected by Qualified Certified Arborist who shall determine the prescription of care at the Contractor's expense.

PART 5 - TREE PROTECTION

A. Contractor's Certified Arborist to determine the location of the Tree Protector Barrier around each tree to remain based on his/her analysis of each existing tree to remain that is adjacent to construction improvements such as utility installation, pavement addition and/or restoration, etc.
B. Contractor shall maintain and repair the Tree Protector Barrier during site construction operations.
C. Contractor's access to the fenced tree protection areas will be permitted only with approval of Owner's Representative and Contractor's Certified Arborist's written directive.
D. There shall no be change in grade within the critical root zone as per ANSI Standards.
E. Contractor shall clear by hand all vegetation to grade within the critical root zones of trees to remain.
F. Contractor shall not install conduit, sprinklers, or any utility line in any critical root zone areas without the approval of the Contractor's Certified Arborist and Owner's Representative.

PART 6 - IRRIGATION

A. Contractor shall irrigate trees as specified by Landscape Architect and Qualified Certified Arborist.
B. On a monthly basis an irrigation audit shall be conducted by an irrigation specialist for review by Landscape Architect or Qualified Certified Arborist.

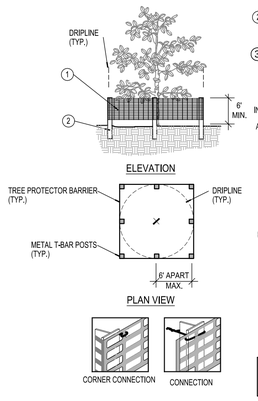

1. SIX (6) FOOT TALL WIRE MESH CONSTRUCTION FENCE BY EIGHT (8) FOOT TALL METAL T-BAR POSTS AND POST CAPS. SUBMIT PRODUCT INFORMATION FOR APPROVAL BY OWNER'S REPRESENTATIVE PRIOR TO INSTALLATION.

2. WEATHER RESISTANT MATERIAL 2' X 2' "TREE PROTECTION ZONE" SIGN. SUBMIT PRODUCT INFORMATION FOR APPROVAL BY OWNER'S REPRESENTATIVE PRIOR TO INSTALLATION.

3. EIGHT (8) FOOT TALL METAL T-BAR POSTS, 24" MINIMUM BURIAL BELOW GRADE OR AS REQUIRED TO CREATE A SAFE CONDITION, WHICHEVER GREATEST. SUBMIT PRODUCT INFORMATION FOR APPROVAL BY OWNER'S REPRESENTATIVE PRIOR TO INSTALLATION.

INSTALLATION NOTES:

A. POST SELECTION SHOULD BE BASED ON EXPECTED STRENGTH NEEDS AND THE LENGTH OF TIME FENCE WILL BE IN PLACE. FLEXIBLE FIBERGLASS ROD POSTS ARE RECOMMENDED FOR PARKS, ATHLETIC EVENTS AND CROWD CONTROL INSTALLATIONS. METAL "T" POSTS OR ARE TYPICALLY USED FOR CONSTRUCTION AND OTHER APPLICATIONS.

B. POSTS SHALL BE DRIVEN INTO THE GROUND TO A DEPTH OF TWO (2) FEET MINIMUM OR AS REQUIRED TO ENSURE A SAFE CONDITION. SPACE POSTS 6' MAXIMUM ON CENTER.

C. SECURE FENCING TO POST WITH NYLON CABLE TIES (AVAILABLE FROM CONWED PLASTICS). WOOD STRIPS MAY BE ALSO BE USED TO PROVIDE ADDITIONAL SUPPORT AND PROTECTION BETWEEN TIES AND POSTS.

NOTE: IF WIRE TIES ARE USED, AVOID DIRECT CONTACT WITH PROTECTOR BARRIER. WIRE MAY DAMAGE PROTECTOR BARRIER OVER TIME.

A TREE/SHRUB PROTECTOR
Barrier Detail
NTS

CALL 48 HOURS BEFORE YOU DIG

IT'S THE LAW! DIAL 811

811 Know what's below. Call before you dig.

SUNSHINE STATE ONE CALL OF FLORIDA, INC.

THIS ITEM HAS BEEN DIGITALLY SIGNED AND SEALED BY KYLER DURHAM, PLA ON THE DATE ADJACENT TO THE SEAL. PRINTED COPIES OF THIS DOCUMENT ARE NOT CONSIDERED SIGNED AND SEALED AND THE SIGNATURE MUST BE VERIFIED ON ANY ELECTRONIC COPIES.

No.	REVISIONS	DATE	BY

Kimley»Horn

© 2024 KIMLEY-HORN AND ASSOCIATES, INC.
445 24TH STREET, SUITE 200, VERO BEACH, FL 32960
PHONE: 772-794-4100
WWW.KIMLEY-HORN.COM REGISTRY NO. 35106

KYLER DURHAM ★ No LA6667668 ★ STATE OF FLORIDA ★ PROFESSIONAL LANDSCAPE ARCHITECT
DATE: 2024.12.04 14:18:10 -05'00'

KHA PROJECT	047427053
DATE	08/05/2024
SCALE	AS SHOWN
DESIGNED BY	JC
DRAWN BY	JC
CHECKED BY	BVJ

TREE DISPOSITION NOTES

STARBUCKS CASHMERE
PREPARED FOR
REGENCY

CITY OF PORT ST. LUCIE FLORIDA

PSL PROJ #: P24-148

SHEET NUMBER
L-101

Plotted By:Durham, Kyler Sheet Set:STARBUCKS CASHMERE Layout:TREE DISPOSITION NOTES December 11, 2024 02:59:17pm K:\VRB_LDEV\Regency\Florida\cashmere starbucks\CAD\plansheets\L-101 TREE DISPOSITION NOTES.dwg
This document, together with the concepts and designs presented herein, as an instrument of service, is intended only for the specific purpose and client for which it was prepared. Reuse of and improper reliance on this document without written authorization and adaptation by Kimley-Horn and Associates, Inc. shall be without liability to Kimley-Horn and Associates, Inc.

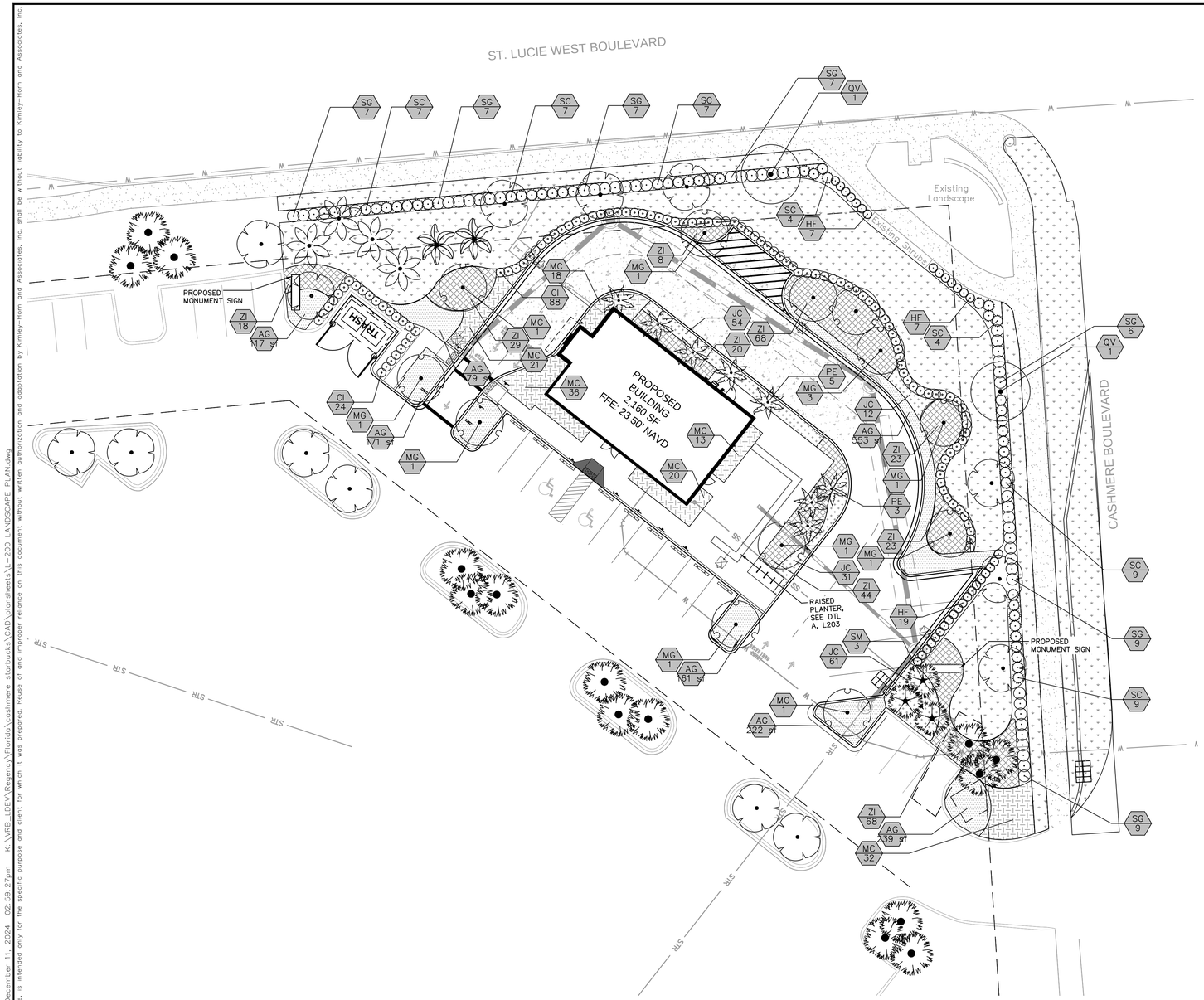

PLANT SCHEDULE

SYMBOL	CODE	QTY	COMMON NAME	BOTANICAL NAME	CONTAINER	CAL	HT	NATIVE	WATER USE
TREES									
	EE2	2	EXISTING TO REMAIN	EXISTING FOXTAIL PALM	F.G.			NO	LOW
	EX	15	EXISTING TO REMAIN	EXISTING MEXICAN FAN PALM	F.G.			NO	MODERATE
	EE3	4	EXISTING TO REMAIN	EXISTING SABAL PALM	F.G.			YES	LOW
	EE	14	EXISTING TO REMAIN	EXISTING SOUTHERN LIVE OAK	F.G.			YES	LOW
	MG	12	SOUTHERN MAGNOLIA	MAGNOLIA GRANDIFLORA	F.G.	2.5" CAL MIN.	12' HT MIN	YES	MODERATE
	PE	8	ALEXANDER PALM	PTYCHOSPERMA ELEGANS	F.G.		12' HT MIN	NO	LOW
	QV	2	SOUTHERN LIVE OAK	QUERCUS VIRGINIANA	F.G.	3" CAL.	12' HT MIN	YES	LOW
	SM	3	MEXICAN FAN PALM	SABAL MEXICANA (RELOCATED)	F.G.			NO	MODERATE

SYMBOL	CODE	QTY	COMMON NAME	BOTANICAL NAME	CONT	SPACING	SIZE	NATIVE	WATER USE
SHRUBS									
	CI	112	COCO PLUM	CHRYSOBALANUS ICACO	CONT.	36" O.C.	6` HT MIN	YES	MODERATE
	HF	33	FIREBUSH	HAMELIA PATENS	CONT.	36" O.C.	24" HT. MIN	YES	MODERATE
	SC	48	SILVER SAW PALMETTO	SERENOA REPENS 'CINEREA'	CONT.	36" O.C.	24" HT. MIN	YES	LOW
	SG	52	GREEN SAW PALMETTO	SERENOA REPENS 'GREEN'	CONT.	36" O.C.	24" HT. MIN	YES	LOW
SHRUB AREAS									
	JC	147	SHORE JUNIPER	JUNIPERUS CONFERTA	CONT.	30" O.C.	12" HT.	NO	LOW
	MC	140	PINK MUHLY GRASS	MUHLENBERGIA CAPILLARIS	CONT.	36" OC	24" HT.	YES	LOW
	ZI	300	COONTIE	ZAMIA INTEGRIFOLIA	CONT.	36" OC	24" HT.	YES	LOW

SYMBOL	CODE	QTY	COMMON NAME	BOTANICAL NAME	CONT	O.C.	SIZE	NATIVE	WATER USE
GROUND COVERS									
	AG	1,827 SF	PERENNIAL PEANUT	ARACHIS GLABRATA	SOD	SOD	SOD	NO	LOW
	PN	8,235 SF	BAHIAGRASS	PASPALUM NOTATUM	SOD				

THIS ITEM HAS BEEN DIGITALLY SIGNED AND SEALED BY KYLER DURHAM. PLA ON THE DATE ADJACENT TO THE SEAL. PRINTED COPIES OF THIS DOCUMENT ARE NOT CONSIDERED SIGNED AND SEALED AND THE SIGNATURE MUST BE VERIFIED ON ANY ELECTRONIC COPIES.

LANDSCAPE CODE REQUIREMENTS

LANDSCAPE CODE REQUIRES MINIMUM OF 50% OF PLANTING MATERIALS TO BE DROUGHT TOLERANT.
- TOTAL TREES: 60
- TOTAL SHRUBS: 821
- TOTAL TREES AND SHRUBS: 881
- TOTAL DROUGHT TOLERANT SHRUBS AND TREES: 743
- 743 / 881 = 84% DROUGHT TOLERANT

PROPOSED GROUND COVER IS 100% DROUGHT TOLERANT.

LANDSCAPE CODE REQUIRES MINIMUM OF 50% OF TREES TO BE NATIVE SPECIES.
- TOTAL EXISTING TREES ON SITE: 38
- TOTAL PROPOSED TREES: 22
- TOTAL TREES: 60

TOTAL NATIVE TREES: 31
31 / 60 = 52% OF TREES ARE NATIVE.

LANDSCAPE CODE REQUIRES MINIMUM OF 20% OF TREES TO BE FLOWERING SPECIES.
- TOTAL TREES: 60
- TOTAL FLOWERING TREES: 12
- 12 / 60 = 20% OF TREES ARE FLOWERING.

LANDSCAPE CODE REQUIRES SITES WITH OVER 41+ TREES TO HAVE 5 DIFFERENT SPECIES.
PROPOSED LANDSCAPE PLAN HAS 6 SPECIES OF TREES AND PALMS.

LANDSCAPE CODE REQUIRES NO MORE THAN 25% OF REQUIRES TREES TO BE PALMS.
- TOTAL TREES: 60
- TOTAL EXISTING PALMS ON SITE: 24
- TOTAL PROPOSED NEW PALMS: 8*
  - *THE 8 PALMS REQUIRED FOR THE BUILDING FACADE LANDSCAPE STRIP ARE EXEMPT FROM THIS REQUIREMENT AND NOT INCLUDED IN THE CALCULATION. NO NEW PALMS ARE PROPOSED FOR THE SITE, ONLY EXISTING PALMS WILL REMAIN.
- 24 / 60 = 40% OF EXISTING TREES ON SITE ARE PALMS.

LANDSCAPE CODE REQUIRES MINIMUM OF 25% OF SHRUBS TO BE NATIVE SPECIES.
- TOTAL PROPOSED SHRUBS: 831
- TOTAL NATIVE SHRUBS: 649
- 649 / 831 = 78% OF SHRUBS ARE NATIVE.

LANDSCAPE CODE REQUIRES SOD TO BE LIMITED TO BE LESS THAN 50% OF OF SITE.
- TOTAL SITE SQUARE FOOTAGE: 17,631
- TOTAL SOD AREA: 8,235 SF (47% OF SITE)
- TOTAL LANDSCAPE AREA: 9,396 SF (53% OF SITE)

LANDSCAPE CODE REQUIRES BUILDING FACADE REQUIREMENTS (206 LF - 20 LF OF ENTRY WAYS AND DRIVE THRU)= 186 LF.
- LANDSCAPE STRIP
  - REQUIRED: 5' WIDE STRIP
  - PROVIDED: 5' WIDE STRIP
- 1 TREE OR PALM PER 30 LF OF BUILDING PERIMETER:
  - REQUIRED: 186 / 30 = 7 TREE OR PALMS
  - PROVIDED: 8 PALMS & 1 TREE
- 1 SHRUB PER 2 LF OF BUILDING PERIMETER
  - REQUIRED: 186 / 2 = 93 SHRUBS
  - PROVIDED: 145 SHRUBS

NORTH

GRAPHIC SCALE IN FEET
0 10 20 40

CALL 48 HOURS BEFORE YOU DIG
IT'S THE LAW! DIAL 811
811 Know what's below. Call before you dig.
SUNSHINE STATE ONE CALL OF FLORIDA, INC.

No.	REVISIONS	DATE	BY

Kimley»Horn
© 2024 KIMLEY-HORN AND ASSOCIATES, INC.
445 24TH STREET, SUITE 200, VERO BEACH, FL 32960
PHONE: 772-794-4100
WWW.KIMLEY-HORN.COM REGISTRY NO. 35106

KYLER R. DURHAM ★ No LA0667668 ★ STATE OF FLORIDA ★ PROFESSIONAL LANDSCAPE ARCHITECT
DATE: 2024.08.05 14:41:18 -04'00'

KHA PROJECT 047427053
DATE 08/05/2024
SCALE AS SHOWN
DESIGNED BY JC
DRAWN BY JC
CHECKED BY BVJ

LANDSCAPE PLAN

STARBUCKS CASHMERE
PREPARED FOR REGENCY
CITY OF PORT ST. LUCIE FLORIDA

PSL PROJ #: P24-148

SHEET NUMBER L-200

Plotted By:Durham, Kyler Sheet Set:STARBUCKS CASHMERE Layout:LANDSCAPE PLAN December 11, 2024 02:59:27pm K:\VRB_LDEV\Regency\Florida\cashmere starbucks\CAD\plansheets\L-200 LANDSCAPE PLAN.dwg
This document, together with the concepts and designs presented herein, as an instrument of service, is intended only for the specific purpose and client for which it was prepared. Reuse of and improper reliance on this document without written authorization and adaptation by Kimley-Horn and Associates, Inc. shall be without liability to Kimley-Horn and Associates, Inc.

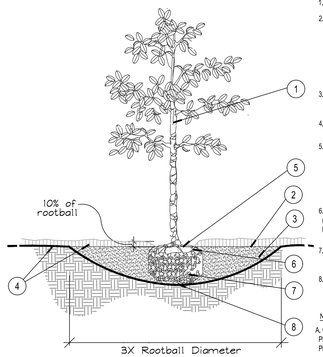

1. TRUNK
2. 3" MINIMUM OF MULCH AS SPECIFIED, WHERE TREES ARE PLACED IN SOD, MULCH RING FOR TREES COVER ROOTBALL SIDES AND EXTEND 18" BEYOND ON ALL SIDES. NO MULCH SHALL BE PLACED OVER TRUNK.
3. SHALLOW/ WIDE PLANT HOLE; TOP SHALL BE 3X THE SIZE OF ROOTBALL.
4. FINISHED GRADE - LANDSCAPE SOIL
5. FIND TOP-MOST ROOT ON ROOTBALL; POSITION ROOTBALL SO THIS TOP ROOT IS 1-2" ABOVE LANDSCAPE SOIL. (APPROX. 10% OF ROOTBALL SHALL BE ABOVE LANDSCAPE SOIL)
6. B & B OR CONTAINER (SEE SPECIFICATIONS FOR ROOT BALL REQUIREMENTS).
7. REMOVE ALL SYNTHETIC MATERIALS FROM ROOTBALL.
8. ROOTBALLS SHALL BE PLACED ON UNDISTURBED SOIL TO PREVENT SETTLING.

NOTES:
A. CONTRACTOR SHALL ASSURE PERCOLATION OF ALL PLANTING PITS PRIOR TO INSTALLATION.
B. FINAL TREE STAKING DETAILS AND PLACEMENT TO BE APPROVED BY OWNER.
C. SEE PRE-APPROVED STAKING METHODS, THIS SHEET

* ALL TREES SHALL BE PLUMB VERTICALLY WITHIN A TOLERANCE OF THREE DEGREES. UNLESS OTHERWISE DIRECTED BY OWNER'S REPRESENTATIVE.

A Tree Planting
SECTION — NTS

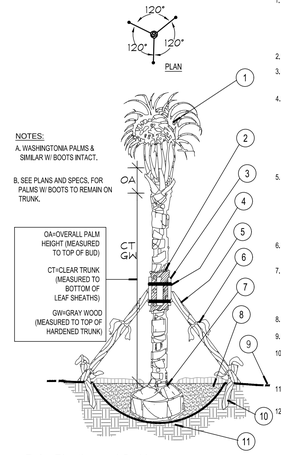

NOTES:
A. WASHINGTONIA PALMS & SIMILAR W/ BOOTS INTACT.
B. SEE PLANS AND SPECS, FOR PALMS W/ BOOTS TO REMAIN ON TRUNK.

OA=OVERALL PALM HEIGHT (MEASURED TO TOP OF BUD)
CT=CLEAR TRUNK (MEASURED TO BOTTOM OF LEAF SHEATHS)
GW=GRAY WOOD (MEASURED TO TOP OF HARDENED TRUNK)

1. MINIMUM OF NINE (9) GOOD PALM FRONDS; PRUNE AND TIE FRONDS WITH HEMP TWINE. SABAL PALMS TO BE SELECTIVELY "HURRICANE CUT", LEAVING ONLY NEWLY-EMERGING GROWTH.
2. 5 LAYERS OF BURLAP TO PROTECT TRUNK.
3. FIVE (5) 18"L, 2X4 WOOD BATTENS, UNTREATED, #2
4. SECURE BATTENS WITH TWO (2) 3/4" CARBON STEEL BANDS TO HOLD BATTENS IN PLACE. NO NAILS SHALL BE DRIVEN INTO PALM. HEIGHT OF BATTENS SHALL BE LOCATED PROPORTIONATELY TO THE HEIGHT OF THE PALM FOR ADEQUATE BRACING.
5. THREE (3) 8'L 2X4 SUPPORTS. NAIL (DRILL AND NAIL IF NECESSARY) TO BATTENS AND 2" X 4" STAKES. PALMS SHALL BE PLUMB VERTICALLY UNLESS OTHERWISE NOTED.
6. PROVIDE FLAGGING AT MIDPOINT AND BASE OF SUPPORTS.
7. TOP-MOST ROOT SHALL BE VISIBLE AT THE SURFACE OF THE ROOTBALL, SLIGHTLY ABOVE SURROUNDING GRADE.
8. 3" SPECIFIED MULCH
9. FINISH GRADE
10. 24"L (MIN.) 2X4 P.T. WOOD STAKES, NAIL TO SUPPORT POLES
11. PREPARED PLANTING SOIL AS SPECIFIED
12. ALTERNATE PALM ANCHORING SYSTEMS MAY BE SUBSTITUTED UPON APPROVAL BY OWNER OR OWNER'S REPRESENTATIVE

PRE-APPROVED SYSTEMS:
*BROOKS TREE BRACE SYSTEM
*ARBOR TIE TREE BRACING

B Palm Planting and Staking
SECTION — NTS

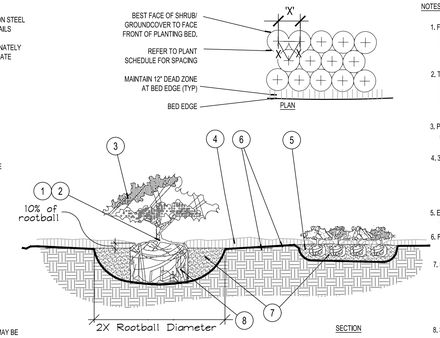

NOTES:
1. FIND POINT WHERE TOPMOST ROOT EMERGES FROM TRUNK WITHIN 2" OF SURFACE. CLEAR EXCESS SOIL IF NECESSARY.
2. TOP 10% OF SHRUB AND GROUNDCOVER ROOTBALLS TO BE PLANTED ABOVE THE LANDSCAPE GRADE. DO NOT COVER EXPOSED 10% ON SIDES WITH SOIL.
3. PRUNE ALL LIKE SHRUBS WITHIN A PLANTED MASS TO ACHIEVE A UNIFORM MASS/HEIGHT.
4. 3" MINIMUM MULCH AS SPECIFIED - DO NOT COVER ENTIRE SHRUB ROOTBALL OR CREATE 'WATER RINGS' ONLY COVER SIDES OF ROOTBALL WITH MULCH
5. EXCAVATE ENTIRE BED SPECIFIED FOR GROUNDCOVER BED.
6. FINISHED GRADE (SEE GRADING PLAN).
7. PREPARED PLANTING SOIL AS SPECIFIED. NOTE: WHEN GROUND- COVERS AND SHRUBS USED IN MASSES, ENTIRE BED TO BE AMENDED WITH PLANTING SOIL MIX AS SPECIFIED.
8. SCARIFY ROOTBALL SIDES AND BOTTOM.

* ALL SHRUBS AND GROUNDCOVERS SHALL BE PLUMB VERTICALLY, UNLESS OTHERWISE DIRECTED BY OWNER'S REPRESENTATIVE.

C Shrub / Groundcover Planting
PLAN/SECTION — NTS

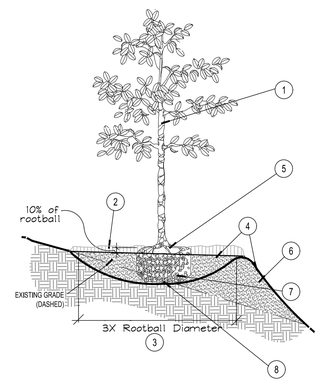

1. TREES, PALMS, AND LARGE SHRUBS (15 GAL OR GREATER) SHALL BE PLANTED IN SIMILAR MANNER
2. 3" MINIMUM OF MULCH AS SPECIFIED. WHERE TREES ARE PLACED IN SOD, MULCH RING FOR TREES COVER ROOTBALL SIDES AND EXTEND 18" BEYOND ON ALL SIDES. NO MULCH SHALL BE PLACED OVER TRUNK.
3. SHALLOW/ WIDE PLANT HOLE; TOP SHALL BE 3X THE SIZE OF ROOTBALL.
4. FINISHED GRADE - LANDSCAPE SOIL
5. FIND TOP-MOST ROOT ON ROOTBALL; POSITION ROOTBALL SO THIS TOP ROOT IS 1-2" ABOVE LANDSCAPE SOIL. (APPROX. 10% OF ROOTBALL SHALL BE ABOVE LANDSCAPE SOIL)
6. BERM SOIL SO THAT TOP OF BERM IS JUST BELOW THE TOP 10% OF THE TOP OF THE ROOTBALL. SLOPE DOWNHILL PORTION OF BERM AS REQUIRED TO MEET EXISTING GRADE.
7. B & B OR CONTAINER REMOVE ALL SYNTHETIC MATERIALS FROM ROOTBALL. (SEE SPECIFICATIONS FOR OTHER ROOT BALL REQUIREMENTS)
8. ROOTBALLS SHALL BE PLACED ON UNDISTURBED SOIL TO PREVENT SETTLING.

NOTES:
A. CONTRACTOR SHALL ASSURE PERCOLATION OF ALL PLANTING PITS PRIOR TO INSTALLATION.
B. FINAL TREE STAKING DETAILS AND PLACEMENT TO BE APPROVED BY OWNER.
C. SEE PRE-APPROVED STAKING METHODS, THIS SHEET

* ALL TREES SHALL BE PLUMB VERTICALLY WITHIN A TOLERANCE OF THREE DEGREES. UNLESS OTHERWISE DIRECTED BY OWNER'S REPRESENTATIVE.

D Planting on a Slope
SECTION — NTS

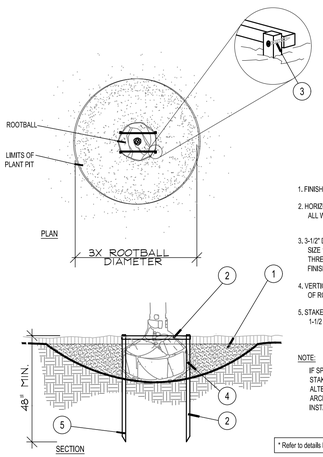

1. FINISH GRADE
2. HORIZONTAL 2X2 SCREWED TO 2X2 STAKE. ALL WOOD SHALL BE #2 UNTREATED.
3. 3-1/2" DRYWALL SCREW, THREAD SIZE 12, SHARP POINT, FULL THREAD, BLACK PHOSPHATE FINISH
4. VERTICAL STAKES SHALL ABUT SIDE OF ROOTBALL
5. STAKES TO EXTEND INTO NATIVE SOIL BY 1-1/2 X THE ROOTBALL DEPTH MIN.

NOTE:
IF SPATIAL REQUIREMENTS PRECLUDE STAKING WITH THIS METHOD, SUBMIT ALTERNATE FOR LANDSCAPE ARCHITECT'S APPROVAL PRIOR TO INSTALLING PLANT.

* Refer to details B and D for planting

E Staking - up to 65 gal. or B&B to 3-1/2" Cal.
PLAN/SECTION — NTS

SOD NOTES:
1. TYPICAL SOLID SOD LAID LEVEL WITH TIGHT JOINTS SET ADJACENT TO EDGE OF PAVEMENT SUCH THAT THE TOP OF SOD WHEN FRESHLY MOWED IS FLUSH WITH TOP OF PAVEMENT IN ORDER NOT TO IMPEDE THE FLOW OF RUNOFF INTO LANDSCAPE AREAS AND TO APPEAR NEAT AND WELL MAINTAINED.
2. ALL SOD LAID ADJACENT TO THE SHRUB OR GROUNDCOVER PLANTING AREAS SHALL HAVE WELL DEFINED BEDLINES, AND SHALL BE INSTALLED A DISTANCE BACK FROM THE FACE EDGE OF PLANT MATERIALS TO ALLOW FOR GROWTH OF THE PLANTS. THE TOP OF THE SOD AND THE FINISHED GRADE OF THE 3" MULCH COVER SHALL BE FLUSH AND LEVEL.
3. SOD SET ON PREPARED GRADE WHICH IS LEVEL OR GRADED TO MEET THE REQUIREMENTS OF THE ENGINEERED SITE DRAINAGE PLANS.

TOP SOIL NOTES:
1. PLANTING SOIL SHALL CONSIST OF 70% CLEAN, SHARP, SILICA SAND AND 30% EVERGLADES MUCK, MIXED WITH THE NATIVE, EXCAVATED SOIL IN A 1:1 RATIO (50/50).
2. TOPSOIL FOR USE IN PREPARING SOIL MIXTURE FOR BACKFILLING PLANT PITS SHALL BE FERTILE, FRIABLE, AND OF A LOAMY CHARACTER; REASONABLY FREE OF SUBSOIL, CLAY LUMPS, BRUSH WEEDS AND OTHER LITTER, FREE OF ROOTS, STUMPS, STONES LARGER THAN 2" IN ANY DIRECTION, AND OTHER EXTRANEOUS OR TOXIC MATTER HARMFUL TO PLANT GROWTH. IT SHALL CONTAIN THREE (3) TO FIVE (5) PERCENT DECOMPOSED ORGANIC MATTER AND A PH BETWEEN 5.5 AND 6.5 - SUBMIT SAMPLE AND PH TESTING RESULTS FOR APPROVAL.
3. CONTRACTOR TO SUBMIT SAMPLES OF SOIL MIXTURE FOR OWNER'S REPRESENTATIVE APPROVAL PRIOR TO PLANT INSTALLATION OPERATIONS COMMENCE.

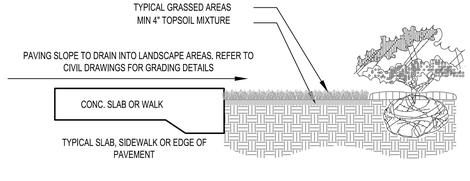

F SOD
SECTION — NTS

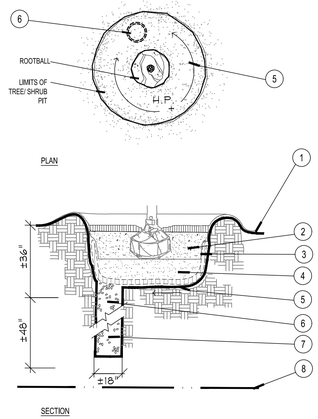

1. FINISH GRADE
2. BACKFILL WITH PREPARED PLANTING SOIL MIX AS SPECIFIED.
3. FILTER CLOTH, MIRAFI 500X OR BETTER
4. 12" CLEAN SAND, COMPACTED. ADJUST LAYER THICKNESS SO TOP OF ROOTBALL IS AT LEAST 1" ABOVE FINISHED GRADE.
5. SLOPE BOTTOM TO DRAIN
6. ±18"Ø AUGURED HOLE PENETRATE THROUGH OCCLUDING LAYER TO WATER TABLE OR TO A DEPTH OF 7' TO ASSURE PROPER PERCOLATION.
7. BACKFILL WITH 1/2" - 3/4" GRAVEL.
8. WATER TABLE. (DEPTH VARIES)

NOTE:
FOR A PARKING ISLAND PLANTING SITUATION, CONTRACTOR TO BACKFILL ENTIRE LENGTH OF PLANTING AREA TO WITHIN 6" OF BACK OF CURB OR EDGE OF PAVEMENT.

REFER TO NOTE 0.3 OF WRITTEN SPECIFICATIONS FOR ADDITIONAL INFORMATION.

G Poor Drainage Condition
PLAN/SECTION — NTS

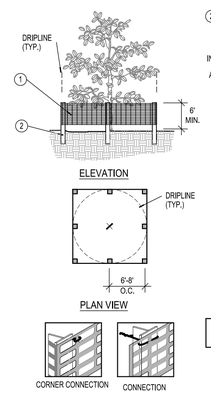

1. 6'H "PERIMETER PLUS" CONSTRUCTION FENCE BY CONWED PLASTICS OR OWNER'S REPRESENTATIVE APPROVED EQUAL. SUBMIT PRODUCT INFORMATION FOR APPROVAL PRIOR TO INSTALLATION.
2. 8' TALL METAL "T" POSTS OR 2" x 2" X 8' PRESSURE TREATED WOOD POSTS WITH 24" BURIAL BELOW GRADE.

INSTALLATION NOTES:
A. POST SELECTION SHOULD BE BASED ON EXPECTED STRENGTH NEEDS AND THE LENGTH OF TIME FENCE WILL BE IN PLACE. FLEXIBLE FIBERGLASS ROD POSTS ARE RECOMMENDED FOR PARKS, ATHLETIC EVENTS AND CROWD CONTROL INSTALLATIONS. METAL "T" POSTS OR TREATED WOOD POSTS ARE TYPICALLY USED FOR CONSTRUCTION AND OTHER APPLICATIONS.
B. POSTS SHOULD BE DRIVEN INTO THE GROUND TO A DEPTH OF 1/4 OF THE HEIGHT OF THE POST, FOR EXAMPLE, A 8' POST SHOULD BE SET AT LEAST 2' INTO THE GROUND.
C. SPACE POSTS EVERY 6' (MIN.) TO 8' (MAX.).
D. SECURE FENCING TO POST WITH NYLON CABLE TIES (AVAILABLE FROM CONWED PLASTICS). WOOD STRIPS MAY BE ALSO BE USED TO PROVIDE ADDITIONAL SUPPORT AND PROTECTION BETWEEN TIES AND POSTS.

NOTE: IF WIRE TIES ARE USED, AVOID DIRECT CONTACT WITH FENCE. WIRE MAY DAMAGE FENCE OVER TIME.

H Tree/Shrub Protector
Barrier Detail — NTS

ROOT BARRIER BY: Century Root Barrier (714)632-7083
(or) DeepRoot (800)458-7668

SIZE: 36" D, OR AS NOTED ON PLAN
MATERIAL: POLYETHYLENE WITH ULTRAVIOLET INHIBITORS
THICKNESS: .085 IN. (min.)

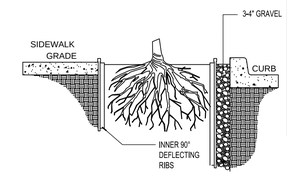

LINEAR APPLICATION

NOTES:
1. INSTALLATION TO BE COMPLETED IN ACCORDANCE WITH MANUFACTURER'S SPECIFICATIONS.
2. DO NOT SCALE DRAWINGS.
3. CENTURY ROOT BARRIER OR APPROVED EQUAL.
4. ROOT BARRIER TO BE INSTALLED FOR ALL TREES WITHIN 5 FEET OF A SIDEWALK OR UTILITY.

I Root Barrier
Barrier Detail — NTS

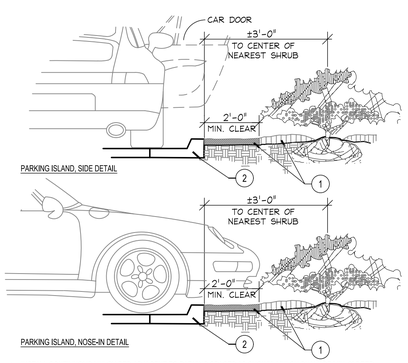

1. INSTALL CONTINUOUS MULCH BED ADJACENT TO PARKING SPACES AS SHOWN. MULCH SHALL BE MIN. 3" DEEP.

NO POP-UP IRRIGATION HEADS SHALL BE LOCATED WITHIN 24" OF A PARKING SPACE ON ANY SIDE

2. CURB OR PARKING LOT EDGE, BY OTHERS

J Parking Space/Curb Planting
SECTION — NTS

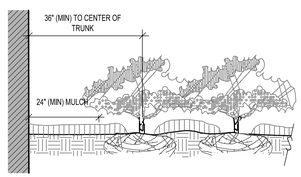

NOTES
* CLEAR ZONE: 36" MIN. FROM BUILDING TO CENTER OF NEAREST SHRUB.

K Plantings Adjacent to Buildings
SECTION — NTS

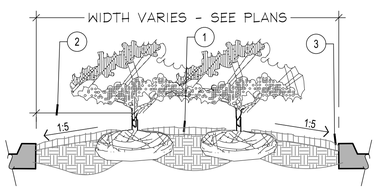

PLANTER ISLAND NOTES
1. CROWN ISLANDS @ 5:1 SLOPES (OR AS SPECIFIED ON THE LANDSCAPE PLANS).
2. CLEAR ZONE: 36" MIN. FROM BACK OF CURB TO CENTER OF NEAREST SHRUB. CLEAR ZONE SHALL CONTAIN 3" CONTINUOUS MULCH OR TURF, SEE PLANS. SEE DETAIL 'I' FOR PLANTER MEDIANS ADJACENT TO PARKING SPACES.
3. 1" MIN VERTICAL CLEARANCE, TOP OF CURB TO TOP OF MULCH.

- EXCAVATE CONTINUOUS 36" DEEP (FROM TOP OF CURB) FOR ENTIRE LENGTH AND WIDTH OF ISLAND & BACKFILL WITH APPROVED PLANTING MIX.
- PROTECT AND RETAIN ALL CURBS AND BASE. COMPACTED SUBGRADE TO REMAIN FOR STRUCTURAL SUPPORT OF CURB SYSTEM (TYP).
- ALL ISLANDS SHALL UTILIZE POOR DRAINAGE DETAIL WHEN PERCOLATION RATES ARE 2" PER HOUR OR LESS.

L Planted Parking Lot Islands / Medians
SECTION — NTS

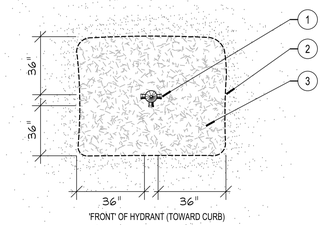

1. FIRE HYDRANT
2. NO TREES SHALL BE PLACED WITHIN SHOWN RADIUS OF ALL PROPOSED OR EXISTING FIRE HYDRANTS. CONTRACTOR SHALL ADJUST PLANT MATERIAL SO THAT NO CONFLICTS WITH FIRE HYDRANTS OCCUR ON SITE.
3. PROVIDE A MULCH, 3" DEPTH MIN., SURROUNDING AREA INDICATED.

M Fire Hydrant Clear Zone
PLAN — NTS

CALL 48 HOURS BEFORE YOU DIG
IT'S THE LAW! DIAL 811
811 Know what's below. Call before you dig.
SUNSHINE STATE ONE CALL OF FLORIDA, INC.

THIS ITEM HAS BEEN DIGITALLY SIGNED AND SEALED BY KYLER DURHAM, PLA ON THE DATE ADJACENT TO THE SEAL. PRINTED COPIES OF THIS DOCUMENT ARE NOT CONSIDERED SIGNED AND SEALED AND THE SIGNATURE MUST BE VERIFIED ON ANY ELECTRONIC COPIES.

No.	REVISIONS	DATE	BY

Kimley»Horn
© 2024 KIMLEY-HORN AND ASSOCIATES, INC.
445 24TH STREET, SUITE 200, VERO BEACH, FL 32960
PHONE: 772-794-4100
WWW.KIMLEY-HORN.COM REGISTRY NO. 35106

KYLER R. DURHAM ★ No. LA6667668 ★ STATE OF FLORIDA ★ PROFESSIONAL LANDSCAPE ARCHITECT

KHA PROJECT	047427053
DATE	08/05/2024
SCALE	AS SHOWN
DESIGNED BY	JC
DRAWN BY	JC
CHECKED BY	BVJ

LANDSCAPE DETAILS

STARBUCKS CASHMERE
PREPARED FOR REGENCY
CITY OF PORT ST. LUCIE FLORIDA

PSL PROJ #: P24-148

SHEET NUMBER
L-201

Plotted By:Durham, Kyler Sheet Set:STARBUCKS CASHMERE Layout:LANDSCAPE DETAILS December 11, 2024 02:59:32pm K:\VRB_LDE\Regency\Florida\cashmere starbucks\CAD\plansheets\L-201 LANDSCAPE DETAILS.dwg
This document, together with the concepts and designs presented herein, as an instrument of service, is intended only for the specific purpose and client for which it was prepared. Reuse of and improper reliance on this document without written authorization and adaptation by Kimley-Horn and Associates, Inc. shall be without liability to Kimley-Horn and Associates, Inc.

GENERAL LANDSCAPE SPECIFICATIONS AND NOTES

A. SCOPE OF WORK

1. THE WORK CONSISTS OF: FURNISHING ALL LABOR, MATERIALS, EQUIPMENT, TOOLS, TRANSPORTATION, AND ANY OTHER APPURTENANCES NECESSARY FOR THE COMPLETION OF THIS PROJECT AS SHOWN ON THE DRAWINGS, AS INCLUDED IN THE PLANT LIST, AND AS HEREIN SPECIFIED.

2. WORK SHALL INCLUDE MAINTENANCE AND WATERING OF ALL CONTRACT PLANTING AREAS UNTIL CERTIFICATION OF ACCEPTABILITY BY THE OWNER.

B. PROTECTION OF EXISTING STRUCTURES

ALL EXISTING BUILDINGS, WALKS, WALLS, PAVING, PIPING, OTHER SITE CONSTRUCTION ITEMS, AND PLANTING ALREADY COMPLETED OR ESTABLISHED SHALL BE PROTECTED FROM DAMAGE BY THE CONTRACTOR UNLESS OTHERWISE SPECIFIED. ALL DAMAGE RESULTING FROM NEGLIGENCE SHALL BE REPAIRED OR REPLACED TO THE SATISFACTION OF THE OWNER, AT NO COST TO THE OWNER.

C. PROTECTION OF EXISTING PLANT MATERIALS OUTSIDE LIMIT OF WORK

THE CONTRACTOR SHALL BE RESPONSIBLE FOR ALL UNAUTHORIZED CUTTING OR DAMAGE TO TREES AND SHRUBS EXISTING OR OTHERWISE, CAUSED BY CARELESS EQUIPMENT OPERATION, MATERIAL STOCKPILING, ETC. THIS SHALL INCLUDE COMPACTION BY DRIVING OR PARKING INSIDE THE DRIP-LINE AND SPILLING OIL, GASOLINE, OR OTHER DELETERIOUS MATERIALS WITHIN THE DRIP-LINE. NO MATERIALS SHALL BE BURNED WHERE HEAT WILL DAMAGE ANY PLANT. EXISTING TREES KILLED OR DAMAGED SO THAT THEY ARE MISSHAPEN AND/ OR UNSIGHTLY SHALL BE REPLACED AT THE COST TO THE CONTRACTOR OF ONE HUNDRED DOLLARS ($100) PER CALIPER INCH ON AN ESCALATING SCALE WHICH ADDS AN ADDITIONAL TWENTY (20) PERCENT PER INCH OVER FOUR (4) INCHES CALIPER AS FIXED AND AGREED LIQUIDATED DAMAGES. CALIPER SHALL BE MEASURED SIX (6) INCHES ABOVE GROUND LEVEL FOR TREES UP TO AND INCLUDING FOUR (4) INCHES IN CALIPER AND TWELVE (12) INCHES ABOVE GROUND LEVEL FOR TREES OVER FOUR (4) INCHES IN CALIPER.

D. MATERIALS

MATERIALS LISTED BELOW SHALL BE SUBMITTED FOR APPROVAL. UPON SUBMITTALS' APPROVAL, DELIVERY OF MATERIALS MAY COMMENCE.

MATERIAL	SUBMITTAL
MULCH	PRODUCT DATA
TOPSOIL MIX	AMENDMENT MIX/ PRODUCT DATA/ TEST RESULTS
PLANTS	PHOTOGRAPHS OF ONE (1) OF EACH SPECIES (OR TAGGED IN NURSERY) INDICATE SIZES (HEIGHT/WIDTH) AND QUALITY PER SPEC. CLIENT-REQUESTED TAGGING MAY SUBSTITUTE PHOTOS.
FERTILIZER	PRODUCT DATA
INNOCULANT	PRODUCT DATA
HERBICIDE	PRODUCT DATA

2. PLANT MATERIALS

A. PLANT SPECIES AND SIZE SHALL CONFORM TO THOSE INDICATED ON THE DRAWINGS. NOMENCLATURE SHALL CONFORM TO STANDARDIZED PLANT NAMES, 1942 EDITION. ALL NURSERY STOCK SHALL BE IN ACCORDANCE WITH GRADES AND STANDARDS FOR NURSERY PLANTS, LATEST EDITION, PUBLISHED BY THE FLORIDA DEPARTMENT OF AGRICULTURE AND CONSUMER SERVICES. ALL PLANTS SHALL BE FLORIDA GRADE NO. 1 OR BETTER AS DETERMINED BY THE FLORIDA DIVISION OF PLANT INDUSTRY. ALL PLANTS SHALL BE HEALTHY, VIGOROUS, SOUND, WELL-BRANCHED, AND FREE OF DISEASE AND INSECTS, INSECT EGGS AND LARVAE AND SHALL HAVE ADEQUATE ROOT SYSTEMS. TREES FOR PLANTING IN ROWS SHALL BE UNIFORM IN SIZE AND SHAPE. ALL MATERIALS SHALL BE SUBJECT TO APPROVAL BY THE OWNER. WHERE ANY REQUIREMENTS ARE OMITTED FROM THE PLANT LIST, THE PLANTS FURNISHED SHALL BE NORMAL FOR THE VARIETY. PLANTS SHALL BE PRUNED PRIOR TO DELIVERY ONLY WITH APPROVAL FROM OWNER OR OWNER'S REPRESENTATIVE. NO SUBSTITUTIONS SHALL BE MADE WITHOUT WRITTEN PERMISSION FROM THE OWNER'S REPRESENTATIVE

B. MEASUREMENTS: THE HEIGHT AND/OR WIDTH OF TREES SHALL BE MEASURED FROM THE GROUND OR ACROSS THE NORMAL SPREAD OF BRANCHES WITH THE PLANTS IN THEIR NORMAL POSITION. THIS MEASUREMENT SHALL NOT INCLUDE THE IMMEDIATE TERMINAL GROWTH. PLANTS LARGER IN SIZE THAN THOSE SPECIFIED IN THE PLANT LIST MAY BE USED IF APPROVED BY THE OWNER. IF THE USE OF LARGER PLANTS IS APPROVED, THE BALL OF EARTH OR SPREAD OF ROOTS SHALL BE INCREASED IN PROPORTION TO THE SIZE OF THE PLANT.

C. INSPECTION: PLANTS SHALL BE SUBJECT TO INSPECTION AND APPROVAL AT THE PLACE OF GROWTH, OR UPON DELIVERY TO THE SITE, AS DETERMINED BY THE OWNER, FOR QUALITY, SIZE, AND VARIETY; SUCH APPROVAL SHALL NOT IMPAIR THE RIGHT OF INSPECTION AND REJECTION AT THE SITE DURING PROGRESS OF THE WORK OR AFTER COMPLETION FOR SIZE AND CONDITION OF ROOT BALLS OR ROOTS, LATENT DEFECTS OR INJURIES. REJECTED PLANTS SHALL BE REMOVED IMMEDIATELY FROM THE SITE. NOTICE REQUESTING INSPECTION SHALL BE SUBMITTED IN WRITING BY THE CONTRACTOR AT LEAST ONE (1) WEEK PRIOR TO ANTICIPATED DATE.

E. SOIL MIXTURE (PLANTING MEDIUM, PLANTING MIX, MIX)

1. SOIL MIXTURE SHALL CONSIST OF 70% COARSE SAND, 30% FLORIDA PEAT AS DESCRIBED BELOW.

2. SOIL FOR USE IN PREPARING SOIL MIXTURE FOR BACKFILLING SHALL BE FERTILE, FRIABLE, AND REASONABLY FREE OF SUBSOIL, CLAY LUMPS, BRUSH WEED AND OTHER LITTER, FREE OF ROOTS, STUMPS, STONE LARGER THAN 2" IN ANY DIRECTION, AND OTHER EXTRANEOUS OR TOXIC MATTER HARMFUL TO PLANT GROWTH. IT SHALL HAVE A PH BETWEEN 5.5 AND 7.0 - SUBMIT SAMPLE AND PH TESTING RESULTS FOR APPROVAL.

3. SAND SHALL BE COARSE, CLEAN, WELL-DRAINING, NATIVE ORTONA MINED SAND. CONTRACTOR SHALL SUBMIT RESULTS OF SOIL TEST FOR PEAT AND SAND PROPOSED FOR USE UNDER THIS CONTRACT FOR APPROVAL.

4. CONTRACTOR SHALL SUBMIT SAMPLES OF SOIL MIXTURE FOR LANDSCAPE ARCHITECT REVIEW UNDER FORMAL SUBMITTAL AND SUBSEQUENTLY TO OWNER'S REPRESENTATIVE THEREAFTER FOR APPROVAL PRIOR TO PLANT INSTALLATION OPERATIONS COMMENCE.

5. FLORIDA MUCK / FLORIDA MUCKY PEAT MAY BE PROVIDED AS A SUBSTITUTE FOR THE 30% FLORIDA PEAT, CONTINGENT UPON PRELIMINARY TEST RESULTS AND AS DETERMINED BY THE LANDSCAPE ARCHITECT DURING THE SUBMITTAL PROCESS. ANY CHANGES IN THE PERCENTAGES OR PARENT MATERIALS REQUIRED TO PROVIDE THE SPECIFIED MIXTURE AS DETERMINED BY THE LANDSCAPE ARCHITECT SHALL BE PROVIDED BY THE CONTRACTOR AT NO ADDITIONAL COST TO OWNER.

6. CONTRACTOR SHALL PROVIDE PH TEST RESULTS FOR ALL MIX COMPONENTS AND FINAL MIX.

7. CONTRACTOR SHALL PROVIDE PENETROMETER ON-SITE AT ALL TIMES FOR COMPACTION INSPECTION AT THE DISCRETION OF THE LANDSCAPE ARCHITECT.

8. PENETROMETER CRITERIA / SPECIFICATIONS SHALL RANGE FROM APPROX. 75 PSI TO LESS THAN 300 PSI OR AS DETERMINED BY THE LANDSCAPE ARCHITECT.

9. FINAL MIX SHALL BE TESTED TO HAVE A SATURATED WEIGHT OF NO MORE THAN 85 POUNDS PER CUBIC FOOT WHEN COMPACTED TO 85% STANDARD PROCTOR. FERTILIZER PRODUCT DATA AND RATE SCHEDULE SHALL BE SUBMITTED CONCURRENTLY WITH THE SOIL SUBMITTAL FOR EVALUATION BY THE LANDSCAPE ARCHITECT.

10. SOIL SHALL BE SUPPLIED BY ATLAS PEAT & SOIL INC. 9621 STATE ROAD, BOYNTON BEACH, FLORIDA 33472 PHONE: 561-734-7300.

*WATERING/IRRIGATION RESTRICTIONS MAY APPLY - REFER TO PROPERTY'S JURISDICTIONAL AUTHORITY.
WATER NECESSARY FOR PLANTING AND MAINTENANCE SHALL BE OF SATISFACTORY QUALITY TO SUSTAIN AN ADEQUATE PLANT GROWTH AND SHALL NOT CONTAIN HARMFUL, NATURAL OR MAN-MADE ELEMENTS DETRIMENTAL TO PLANTS. WATER MEETING THE ABOVE STANDARD SHALL BE OBTAINED ON THE SITE FROM THE OWNER, IF AVAILABLE, AND THE CONTRACTOR SHALL BE RESPONSIBLE TO MAKE ARRANGEMENTS FOR ITS USE BY HIS TANKS, HOSES, SPRINKLERS, ETC.. IF SUCH WATER IS NOT AVAILABLE AT THE SITE, THE CONTRACTOR SHALL PROVIDE SATISFACTORY WATER FROM SOURCES OFF THE SITE AT NO ADDITIONAL COST TO THE OWNER.

CONTRACTOR SHALL PROVIDE FERTILIZER APPLICATION SCHEDULE TO OWNER, AS APPLICABLE TO SOIL TYPE, PLANT INSTALLATION TYPE, AND SITE'S PROPOSED USE. SUGGESTED FERTILIZER TYPES SHALL BE ORGANIC OR OTHERWISE NATURALLY-DERIVED.

*FERTILIZER RESTRICTIONS MAY APPLY - REFER TO PROPERTY'S JURISDICTIONAL AUTHORITY.

H. ROCK MULCH

ROCK MULCH MATERIAL SHALL BE TWO (2) TO THREE (3) INCHES DIAMETER CHATTAHOOCHEE ROCK (OR APPROVED EQUAL) AT A MINIMUM DEPTH OF THREE (3) INCHES IN ALL LANDSCAPE SHRUB AND GROUNDCOVER AREAS. THE ROCK MULCH SHALL CONFINE TO THE LANDSCAPE BED LINES ESTABLISHED BY ADJACENT SOD AREAS, HARDSCAPE AREAS, AND CURBS. CLEAR MULCH FROM EACH PLANT'S CROWN (BASE).

I. DIGGING AND HANDLING

1. PROTECT ROOTS OR ROOT BALLS OF PLANTS AT ALL TIMES FROM SUN, DRYING WINDS, WATER AND FREEZING, AS NECESSARY UNTIL PLANTING. PLANT MATERIALS SHALL BE ADEQUATELY PACKED TO PREVENT DAMAGE DURING TRANSIT. TREES TRANSPORTED MORE THAN TEN (10) MILES OR WHICH ARE NOT PLANTED WITHIN THREE (3) DAYS OF DELIVERY TO SITE SHALL BE SPRAYED WITH AN ANTITRANSPIRANT PRODUCT ("WILTPRUF" OR EQUAL) TO MINIMIZE TRANSPIRATIONAL WATER LOSS.

2. BALLED AND BURLAPPED PLANTS (B&B) SHALL BE DUG WITH FIRM, NATURAL BALLS OF SOIL OF SUFFICIENT SIZE TO ENCOMPASS THE FIBROUS AND FEEDING ROOTS OF THE PLANTS. NO PLANTS MOVED WITH A ROOT BALL SHALL BE PLANTED IF THE BALL IS CRACKED OR BROKEN. PLANTS BALLED AND BURLAPPED OR CONTAINER GROWN SHALL NOT BE HANDLED BY STEMS.

3. PLANTS MARKED "BR" IN THE PLANT LIST SHALL BE DUG WITH BARE ROOTS, COMPLYING WITH FLORIDA GRADES AND STANDARDS FOR NURSERY PLANTS, CURRENT EDITION. CARE SHALL BE EXERCISED THAT THE ROOTS DO NOT DRY OUT DURING TRANSPORTATION AND PRIOR TO PLANTING.

4. PROTECTION OF PALMS (IF APPLICABLE): ONLY A MINIMUM OF FRONDS SHALL BE REMOVED FROM THE CROWN OF THE PALM TREES TO FACILITATE MOVING AND HANDLING. CLEAR TRUNK (CT) SHALL BE AS SPECIFIED AFTER THE MINIMUM OF FRONDS HAVE BEEN REMOVED. ALL PALMS SHALL BE BRACED PER PALM PLANTING DETAIL.

5. EXCAVATION OF TREE PITS SHALL BE PERFORMED USING EXTREME CARE TO AVOID DAMAGE TO SURFACE AND SUBSURFACE ELEMENTS SUCH AS UTILITIES OR HARDSCAPE ELEMENTS, FOOTERS AND PREPARED SUB- BASES.

J. CONTAINER GROWN STOCK

1. ALL CONTAINER GROWN MATERIAL SHALL BE HEALTHY, VIGOROUS, WELL-ROOTED PLANTS ESTABLISHED IN THE CONTAINER IN WHICH THEY ARE SOLD. THE PLANTS SHALL HAVE TOPS WHICH ARE OF GOOD QUALITY AND ARE IN A HEALTHY GROWING CONDITION, FLORIDA #1 OR BETTER.

2. AN ESTABLISHED CONTAINER GROWN PLANT SHALL BE TRANSPLANTED INTO A CONTAINER AND GROWN IN THAT CONTAINER SUFFICIENTLY LONG FOR THE NEW FIBROUS ROOTS TO HAVE DEVELOPED SO THAT THE ROOT MASS WILL RETAIN ITS SHAPE AND HOLD TOGETHER WHEN REMOVED FROM THE CONTAINER. CONTAINER GROWN STOCK SHALL NOT BE HANDLED BY THEIR STEMS.

3. PLANT ROOTS BOUND IN CONTAINERS ARE NOT ACCEPTABLE.

4. SUBSTITUTION OF NON-CONTAINER GROWN MATERIAL FOR MATERIAL EXPLICITLY SPECIFIED TO BE CONTAINER GROWN WILL NOT BE PERMITTED WITHOUT WRITTEN APPROVAL IS OBTAINED FROM THE OWNER OR OWNER'S REPRESENTATIVE.

K. COLLECTED STOCK

WHEN THE USE OF COLLECTED STOCK IS PERMITTED AS INDICATED BY THE OWNER OR OWNER'S REPRESENTATIVE, THE MINIMUM SIZES OF ROOTBALLS SHALL BE EQUAL TO THAT SPECIFIED FOR THE NEXT LARGER SIZE OF NURSERY GROWN STOCK OF THE SAME VARIETY.

L. NATIVE STOCK

PLANTS COLLECTED FROM WILD OR NATIVE STANDS SHALL BE CONSIDERED NURSERY GROWN WHEN THEY HAVE BEEN SUCCESSFULLY RE-ESTABLISHED IN A NURSERY ROW AND GROWN UNDER REGULAR NURSERY CULTURAL PRACTICES FOR A MINIMUM OF TWO (2) GROWING SEASONS AND HAVE ATTAINED ADEQUATE ROOT AND TOP GROWTH TO INDICATE FULL RECOVERY FROM TRANSPLANTING INTO THE NURSERY ROW.

M. MATERIALS LIST

QUANTITIES NECESSARY TO COMPLETE THE WORK ON THE DRAWINGS SHALL BE FURNISHED BY THE CONTRACTOR. QUANTITY ESTIMATES HAVE BEEN MADE CAREFULLY, BUT THE LANDSCAPE ARCHITECT OR OWNER ASSUMES NO LIABILITY FOR OMISSIONS OR ERRORS. SHOULD A DISCREPANCY OCCUR BETWEEN THE PLANS AND THE PLANT LIST QUANTITY, THE LANDSCAPE ARCHITECT SHALL BE NOTIFIED FOR CLARIFICATION PRIOR TO BIDDING OR INSTALLATION. ALL DIMENSIONS AND/OR SIZES SPECIFIED SHALL BE THE MINIMUM ACCEPTABLE SIZE

N. FINE GRADING

1. FINE GRADING UNDER THIS CONTRACT SHALL CONSIST OF FINAL FINISHED GRADING OF LAWN AND PLANTING AREAS THAT HAVE BEEN ROUGH GRADED BY OTHERS. BERMING AS SHOWN ON THE DRAWINGS SHALL BE THE RESPONSIBILITY OF THE CONTRACTOR, UNLESS OTHERWISE NOTED.

2. THE CONTRACTOR SHALL FINE GRADE THE LAWN AND PLANTING AREAS TO BRING THE ROUGH GRADE UP TO FINAL FINISHED GRADE ALLOWING FOR THICKNESS OF SOD AND/OR MULCH DEPTH. THIS CONTRACTOR SHALL FINE GRADE BY HAND AND/OR WITH ALL EQUIPMENT NECESSARY INCLUDING A GRADING TRACTOR WITH FRONT-END LOADER FOR TRANSPORTING SOIL WITHIN THE SITE.

3. ALL PLANTING AREAS SHALL BE GRADED AND MAINTAINED FOR POSITIVE DRAINAGE TO SURFACE/SUBSURFACE STORM DRAIN SYSTEMS. AREAS ADJACENT TO BUILDINGS SHALL SLOPE AWAY FROM THE BUILDINGS. REFER TO CIVIL ENGINEER'S PLANS FOR FINAL GRADES.

O. PLANTING PROCEDURES

1. CLEANING UP BEFORE COMMENCING WORK: THE CONTRACTOR SHALL CLEAN WORK AND SURROUNDING AREAS OF ALL RUBBISH OR OBJECTIONABLE MATTER. ALL MORTAR, CEMENT, AND TOXIC MATERIAL SHALL BE REMOVED FROM THE SURFACE OF ALL PLANT BEDS. THESE MATERIALS SHALL NOT BE MIXED WITH THE SOIL. SHOULD THE CONTRACTOR FIND SUCH SOIL CONDITIONS BENEATH THE SOIL WHICH WILL IN ANY WAY ADVERSELY AFFECT THE PLANT GROWTH, HE SHALL IMMEDIATELY CALL IT TO THE ATTENTION OF THE OWNER'S REPRESENTATIVE. FAILURE TO DO SO BEFORE PLANTING SHALL MAKE THE CORRECTIVE MEASURES THE RESPONSIBILITY OF THE CONTRACTOR.

2. VERIFY LOCATIONS OF ALL UTILITIES, CONDUITS, SUPPLY LINES AND CABLES, INCLUDING BUT NOT LIMITED TO: ELECTRIC, GAS (LINES AND TANKS), WATER, SANITARY SEWER, STORMWATER SYSTEMS, CABLE, AND TELEPHONE. PROPERLY MAINTAIN AND PROTECT EXISTING UTILITIES. CALL NATIONAL ONE CALL - 811 - TO LOCATE UTILITIES.

3. SUBGRADE EXCAVATION: CONTRACTOR IS RESPONSIBLE TO REMOVE ALL EXISTING AND IMPORTED LIMEROCK AND LIMEROCK SUB-BASE FROM ALL LANDSCAPE PLANTING AREAS TO A MINIMUM DEPTH OF 36". CONTRACTOR IS RESPONSIBLE TO BACKFILL THESE PLANTING AREAS TO ROUGH FINISHED GRADE WITH CLEAN TOPSOIL FROM AN ON-SITE SOURCE OR AN IMPORTED SOURCE. IF LIMEROCK OR OTHER ADVERSE CONDITIONS OCCUR IN PLANTED AREAS AFTER 36" DEEP EXCAVATION BY THE CONTRACTOR, AND ADEQUATE PERCOLATION CAN NOT BE ACHIEVED, CONTRACTOR SHALL UTILIZE PLANTING DETAIL THAT ADDRESSES POOR DRAINAGE.

4. FURNISH NURSERY'S CERTIFICATE OF COMPLIANCE WITH ALL REQUIREMENTS AS HEREIN SPECIFIED AND REQUIRED. INSPECT AND SELECT PLANT MATERIALS BEFORE PLANTS ARE DUG AT NURSERY OR GROWING SITE.

5. GENERAL: COMPLY WITH APPLICABLE FEDERAL, STATE, COUNTY, AND LOCAL REGULATIONS GOVERNING LANDSCAPE MATERIALS AND WORK. CONFORM TO ACCEPTED HORTICULTURAL PRACTICES AS USED IN THE TRADE. UPON ARRIVAL AT THE SITE , PLANTS SHALL BE THOROUGHLY WATERED AND PROPERLY MAINTAINED UNTIL PLANTED. PLANTS STORED ON-SITE SHALL NOT REMAIN UNPLANTED FOR A PERIOD EXCEEDING TWENTY-FOUR (24) HOURS. AT ALL TIMES, METHODS CUSTOMARY IN GOOD HORTICULTURAL PRACTICES SHALL BE EXERCISED.

6. THE WORK SHALL BE COORDINATED WITH OTHER TRADES TO PREVENT CONFLICTS. COORDINATE PLANTING WITH IRRIGATION WORK TO ASSURE AVAILABILITY OF WATER AND PROPER LOCATION OF IRRIGATION APPURTENANCES AND PLANTS.

7. ALL PLANTING PITS SHALL BE EXCAVATED TO SIZE AND DEPTH IN ACCORDANCE WITH THE USA STANDARD FOR NURSERY STOCK Z60.1, UNLESS SHOWN OTHERWISE ON THE DRAWINGS, AND BACKFILLED WITH THE PREPARED PLANTING SOIL MIXTURE AS SPECIFIED IN SECTION E. TEST ALL TREE PITS WITH WATER BEFORE PLANTING TO ASSURE PROPER DRAINAGE PERCOLATION IS AVAILABLE. NO ALLOWANCE WILL BE MADE FOR LOST PLANTS DUE TO IMPROPER PERCOLATION. IF POOR PERCOLATION EXISTS, UTILIZE "POOR DRAINAGE CONDITION" PLANTING DETAIL. TREES SHALL BE SET PLUMB AND HELD IN POSITION UNTIL THE PLANTING MIXTURE HAS BEEN FLUSHED INTO PLACE WITH A SLOW, FULL HOSE STREAM. ALL PLANTING SHALL BE PERFORMED BY PERSONNEL FAMILIAR WITH PLANTING PROCEDURES AND UNDER THE SUPERVISION OF A QUALIFIED LANDSCAPE FOREMAN. PROPER "JETTING IN" SHALL BE ASSURED TO ELIMINATE AIR POCKETS AROUND THE ROOTS. "JET STICK" OR EQUAL IS RECOMMENDED.

8. TAKE ALL NECESSARY PRECAUTIONS TO AVOID DAMAGE TO BUILDINGS AND BUILDING STRUCTURES WHILE INSTALLING TREES.

9. SOIL MIXTURE SHALL BE AS SPECIFIED IN SECTION E OF THESE SPECIFICATIONS.

10. TREES AND SHRUBS SHALL BE SET STRAIGHT AT AN ELEVATION THAT, AFTER SETTLEMENT, THE PLANT CROWN WILL STAND ONE (1) TO TWO (2) INCHES ABOVE GRADE. EACH PLANT SHALL BE SET IN THE CENTER OF THE PIT. PLANTING SOIL MIXTURE SHALL BE BACKFILLED, THOROUGHLY TAMPED AROUND THE BALL, AND SETTLED BY WATER (AFTER TAMPING).

11. AMEND PINE AND OAK PLANT PITS WITH ECTOMYCORRHIZAL SOIL APPLICATION PER MANUFACTURER'S RECOMMENDATION. ALL OTHER PLANT PITS SHALL BE AMENDED WITH ENDOMYCORRHIZAL SOIL APPLICATION PER MANUFACTURER'S RECOMMENDATION. PROVIDE PRODUCT INFORMATION SUBMITTAL PRIOR TO INOCULATION.

12. FILL HOLE WITH SOIL MIXTURE, MAKING CERTAIN ALL SOIL IS SATURATED. TO DO THIS, FILL HOLE WITH WATER AND ALLOW TO SOAK MINIMUM TWENTY (20) MINUTES, STIRRING IF NECESSARY TO GET SOIL THOROUGHLY WET. PACK LIGHTLY WITH FEET. ADD MORE WET SOIL MIXTURE. DO NOT COVER TOP OF BALL WITH SOIL MIXTURE, ONLY WITH MULCH. ALL BURLAP, ROPE, WIRES, BASKETS, ETC... SHALL BE REMOVED FROM THE SIDES AND TOPS OF BALLS, BUT NO BURLAP SHALL BE PULLED FROM UNDERNEATH.

13. PRUNING: TREES SHALL BE PRUNED, AT THE DIRECTION OF THE OWNER OR OWNER'S REPRESENTATIVE, TO PRESERVE THE NATURAL CHARACTER OF THE PLANT. ALL SOFT WOOD OR SUCKER GROWTH AND ALL BROKEN OR BADLY DAMAGED BRANCHES SHALL BE REMOVED WITH A CLEAN CUT. ALL PRUNING TO BE PERFORMED BY LICENSED ARBORIST, IN ACCORDANCE WITH ANSI A-300.

14. SHRUBS AND GROUND COVER PLANTS SHALL BE EVENLY SPACED IN ACCORDANCE WITH THE DRAWINGS AND AS INDICATED ON THE PLANT LIST. CULTIVATE ALL PLANTING AREAS TO A MINIMUM DEPTH OF 6", REMOVE AND DISPOSE ALL DEBRIS. MIX TOP 4" TO ACHEIVE SOIL MIXTURE AS SPECIFIED IN SECTION E. THOROUGHLY WATER ALL PLANTS AFTER INSTALLATION.

15. TREE GUYING AND BRACING SHALL BE INSTALLED BY THE CONTRACTOR IN ACCORDANCE WITH THE PLANS TO INSURE STABILITY AND MAINTAIN TREES IN AN UPRIGHT POSITION. IF THE CONTRACTOR AND OWNER DECIDE TO WAIVE THE TREE GUYING AND BRACING, THE OWNER SHALL NOTIFY THE LANDSCAPE ARCHITECT IN WRITING AND AGREE TO INDEMNIFY AND HOLD HARMLESS THE LANDSCAPE ARCHITECT IN THE EVENT UNSUPPORTED TREES PLANTED UNDER THIS CONTRACT FALL AND DAMAGE PERSON OR PROPERTY.

16. MULCHING: PROVIDE A THREE INCH (MINIMUM) LAYER OF SPECIFIED MULCH OVER THE ENTIRE AREA OF EACH SHRUB BED, GROUND COVER, VINE BED, AND TREE PIT PLANTED UNDER THIS CONTRACT.

17. HERBICIDE WEED CONTROL: ALL PLANT BEDS SHALL BE KEPT FREE OF NOXIOUS WEEDS UNTIL FINAL ACCEPTANCE OF WORK. IF DIRECTED BY THE OWNER, "ROUND-UP" SHALL BE APPLIED FOR WEED CONTROL BY QUALIFIED PERSONNEL TO ALL PLANTING AREAS IN SPOT APPLICATIONS PER MANUFACTURER'S PRECAUTIONS AND SPECIFICATIONS. PRIOR TO FINAL INSPECTION, TREAT ALL PLANTING BEDS WITH AN APPROVED PRE-EMERGENT HERBICIDE AT AN APPLICATION RATE RECOMMENDED BY THE MANUFACTURER. (AS ALLOWED BY JURISDICTIONAL AUTHORITY)

P. LAWN SODDING

1. THE WORK CONSISTS OF LAWN BED PREPARATION, SOIL PREPARATION, AND SODDING COMPLETE, IN STRICT ACCORDANCE WITH THE SPECIFICATIONS AND THE APPLICABLE DRAWINGS TO PRODUCE A TURF GRASS LAWN ACCEPTABLE TO THE OWNER.

2. LAWN BED PREPARATION: ALL AREAS THAT ARE TO BE SODDED SHALL BE CLEARED OF ANY ROUGH GRASS, WEEDS, AND DEBRIS, AND THE GROUND BROUGHT TO AN EVEN GRADE. THE ENTIRE SURFACE SHALL BE ROLLED WITH A ROLLER WEIGHING NOT MORE THAN ONE-HUNDRED (100) POUNDS PER FOOT OF WIDTH. DURING THE ROLLING, ALL DEPRESSIONS CAUSED BY SETTLEMENT SHALL BE FILLED WITH ADDITIONAL SOIL, AND THE SURFACE SHALL BE REGRADED AND ROLLED UNTIL PRESENTING A SMOOTH AND EVEN FINISH TO THE REQUIRED GRADE.

3. SOIL PREPARATION: PREPARE LOOSE BED FOUR (4) INCHES DEEP. HAND RAKE UNTIL ALL BUMPS AND DEPRESSIONS ARE REMOVED. WET PREPARED AREA THOROUGHLY.

4. SODDING

A. THE CONTRACTOR SHALL SOD ALL AREAS THAT ARE NOT PAVED OR PLANTED AS DESIGNATED ON THE DRAWINGS WITHIN THE CONTRACT LIMITS, UNLESS SPECIFICALLY NOTED OTHERWISE.

B. THE SOD SHALL BE CERTIFIED TO MEET FLORIDA STATE PLANT BOARD SPECIFICATIONS, ABSOLUTELY TRUE TO VARIETAL TYPE, AND FREE FROM WEEDS, FUNGUS, INSECTS AND DISEASE OF ANY KIND.

C. SOD PANELS SHALL BE LAID TIGHTLY TOGETHER SO AS TO MAKE A SOLID SODDED LAWN AREA. SOD SHALL BE LAID UNIFORMLY AGAINST THE EDGES OF ALL CURBS AND OTHER HARDSCAPE ELEMENTS, PAVED AND PLANTED AREAS, ADJACENT TO BUILDINGS, A 24 INCH STONE MULCH STRIP SHALL BE PROVIDED - REFER TO DETAILS. IMMEDIATELY FOLLOWING SOD LAYING, THE LAWN AREAS SHALL BE ROLLED WITH A LAWN ROLLER CUSTOMARILY USED FOR SUCH

5. DURING GREEN BANK PRENTICE AND DURING INITIAL PLANTING THE OWNER OR REPRESENTATIVE SHALL INSPECT AS NECESSARY TIMES BEFORE ROLLING TO BE SURE THE SOD DOES NOT DRY OUT. ADEQUATE MOISTURE AND EQUIPMENT SHALL BE ON HAND TO KEEP THE SOD SATURATED DURING ROLLING. SOD SHALL BE WATERED AS DIRECTED BY THE OWNER OR REPRESENTATIVE. SUFFICIENT WATER SHALL BE APPLIED TO THE ENTIRE SURFACE OF THE SOD AND THOROUGHLY WATERED IN. FERTILIZE INSTALLED SOD AS ALLOWED BY PROPERTY'S JURISDICTIONAL AUTHORITY.

6. LAWN MAINTENANCE:

A. WITHIN THE CONTRACT LIMITS, THE CONTRACTOR SHALL PRODUCE A DENSE, WELL ESTABLISHED LAWN. THE CONTRACTOR SHALL BE RESPONSIBLE FOR THE REPAIR AND RE-SODDING OF ALL ERODED, SUNKEN OR BARE SPOTS (LARGER THAN 12"X12") UNTIL CERTIFICATION OF ACCEPTABILITY BY THE OWNER'S REPRESENTATIVE. REPAIRED SODDING SHALL BE ACCOMPLISHED AS IN THE ORIGINAL WORK (INCLUDING REGRADING IF NECESSARY).

B. CONTRACTOR RESPONSIBLE FOR ESTABLISHING AND MAINTAINING SOD/LAWN UNTIL ACCEPTANCE BY THE OWNER'S REPRESENTATIVE. PRIOR TO AND UPON ACCEPTANCE, CONTRACTOR TO PROVIDE WATERING/IRRIGATION SCHEDULE TO OWNER. OBSERVE ALL APPLICABLE WATERING RESTRICTIONS AS SET FORTH BY THE PROPERTY'S JURISDICTIONAL AUTHORITY.

Q. CLEANUP

UPON COMPLETION OF ALL PLANTING WORK AND BEFORE FINAL ACCEPTANCE, THE CONTRACTOR SHALL REMOVE ALL MATERIAL, EQUIPMENT, AND DEBRIS RESULTING FROM HIS WORK. ALL PAVED AREAS SHALL BE BROOM-CLEANED AND THE SITE LEFT IN A NEAT AND ACCEPTABLE CONDITION AS APPROVED BY THE OWNER'S AUTHORIZED REPRESENTATIVE.

R. PLANT MATERIAL MAINTENANCE

ALL PLANTS AND PLANTING INCLUDED UNDER THIS CONTRACT SHALL BE MAINTAINED BY WATERING, CULTIVATING, SPRAYING, AND ALL OTHER OPERATIONS (SUCH AS RE-STAKING OR REPAIRING GUY SUPPORTS) NECESSARY TO INSURE A HEALTHY PLANT CONDITION BY THE CONTRACTOR UNTIL CERTIFICATION OF ACCEPTABILITY BY THE OWNER'S REPRESENTATIVE. MAINTENANCE AFTER THE CERTIFICATION OF ACCEPTABILITY SHALL BE IN ACCORDANCE WITH THE SPECIFICATIONS IN THIS SECTION. CONTRACTORS ARE REQUESTED TO PROVIDE A BID ESTIMATE TO COVER LANDSCAPE AND IRRIGATION MAINTENANCE FOR A PERIOD OF 90 CALENDAR DAYS COMMENCING AFTER ACCEPTANCE.

S. MAINTENANCE (ALTERNATE BID ITEM)

CONTRACTORS ARE REQUESTED TO PROVIDE A BID ESTIMATE FOR MAINTENANCE FOLLOWING THE INITIAL 90-DAY MAINTENANCE PERIOD ON A COST-PER-MONTH BASIS.

T. FINAL INSPECTION AND ACCEPTANCE OF WORK

FINAL INSPECTION AT THE END OF THE WARRANTY PERIOD SHALL BE ON PLANTING, CONSTRUCTION AND ALL OTHER INCIDENTAL WORK PERTAINING TO THIS CONTRACT. ANY REPLACEMENT AT THIS TIME SHALL BE SUBJECT TO THE SAME ONE (1) YEAR WARRANTY (OR AS SPECIFIED BY THE LANDSCAPE ARCHITECT OR OWNER IN WRITING) BEGINNING WITH THE TIME OF REPLACEMENT AND ENDING WITH THE SAME INSPECTION AND ACCEPTANCE HEREIN DESCRIBED.

U. WARRANTY

1. THE LIFE AND SATISFACTORY CONDITION OF ALL PLANT MATERIAL INSTALLED BY THE LANDSCAPE CONTRACTOR SHALL BE WARRANTED BY THE CONTRACTOR FOR A MINIMUM OF ONE (1) CALENDAR YEAR COMMENCING AT THE TIME OF CERTIFICATION OF ACCEPTABILITY BY THE OWNER'S REPRESENTATIVE.

2. REPLACEMENT: ANY PLANT NOT FOUND IN A HEALTHY GROWING CONDITION AT THE END OF THE WARRANTY PERIOD SHALL BE REMOVED FROM THE SITE AND REPLACED AS SOON AS WEATHER CONDITIONS PERMIT. ALL REPLACEMENTS SHALL BE PLANTS OF THE SAME KIND AND SIZE AS SPECIFIED IN THE PLANT LIST. THEY SHALL BE FURNISHED PLANTED AND MULCHED AS SPECIFIED UNDER "PLANTING", AT NO ADDITIONAL COST TO THE OWNER.

3. IN THE EVENT THE OWNER DOES NOT CONTRACT WITH THE CONTRACTOR FOR LANDSCAPE (AND IRRIGATION) MAINTENANCE, THE CONTRACTOR IS ENCOURAGED TO VISIT THE PROJECT SITE PERIODICALLY DURING THE ONE YEAR WARRANTY PERIOD TO EVALUATE MAINTENANCE PROCEDURES BEING PERFORMED BY THE OWNER, AND SHALL NOTIFY THE OWNER IN WRITING OF MAINTENANCE PROCEDURES OR CONDITIONS WHICH THREATEN VIGOROUS AND HEALTHY PLANT GROWTH. IT IS SUGGESTED SUCH SITE VISITS SHALL BE CONDUCTED A MINIMUM OF ONCE PER MONTH FOR A PERIOD OF TWELVE (12) MONTHS FROM THE DATE OF ACCEPTANCE.

CALL 48 HOURS BEFORE YOU DIG

*NOTE:
1. CONTRACTOR SHALL SUBMIT PRODUCT DATA FOR REVIEW AND ACCEPTANCE BY THE CLIENT, CIVIL ENGINEER, AND LANDSCAPE ARCHITECT PRIOR TO PROCUREMENT, FABRICATION, AND INSTALLATION.

MANUFACTURER: POTSPLANTERSANDMORE.com (888) 381 - 9501

MODEL: SEE BELOW

SIZES: POTSDAM 72"x16"x32"

COLOR: TO BE SELECTED BY OWNER FROM MANUFACTURER'S FULL RANGE

NOTES: INSTALL 12" DEEP DRAINAGE STONE IN BOTTOM OF POT WITH LANDSCAPE FILTER FABRIC FOR MEDIAN SEPARATION. ALL POTS TO BE FURNISHED WITH DRAINAGE HOLES.

TOLGA+POTSDAM+PERTH

69367 TOLGA | 69345 POTSDAM | 69050 PERTH

part number	outside dimensions	opening	base size	weight	gallons
69367.36	36"L x 16"W x 24"H	33.25"L x 13.25"W	36"L x 16"W	33.1 lbs	51.4
69367.48	48"L x 16"W x 24"H	45.25"L x 13.25"W	48"L x 16"W	39.7 lbs	68.6
69367.60	60"L x 16"W x 24"H	57.25"L x 13.25"W	60"L x 16"W	47.4 lbs	85.7
69345.36	36"L x 16"W x 32"H	33.25"L x 13.25"W	36"L x 16"W	40.8 lbs	68.6
69345.48	48"L x 16"W x 32"H	45.25"L x 13.25"W	48"L x 16"W	52.9 lbs	91.4
69345.72	72"L x 16"W x 32"H	69"L x 13.25"W	72"L x 16"W	73.2 lbs	137
69050.36	36"L x 16"W x 42"H	33.25"L x 13.25"W	36"L x 16"W	50.7 lbs	90
69050.48	48"L x 16"W x 42"H	45.25"L x 13.25"W	48"L x 16"W	65 lbs	120

Please note that sizes my vary by up to 2% and that weights are approximations.

REINFORCED CONSTRUCTION | LIGHTWEIGHT | MODERN DESIGN | HAND-CRAFTED | UV AND FROST RESISTANT

pots planters and more

www.potsplantersandmore.com
888.381.9501 Skokie, IL

(A) FREESTANDING PLANTER POT

NOT TO SCALE

No.	REVISIONS	DATE	BY

Kimley»Horn
© 2024 KIMLEY-HORN AND ASSOCIATES, INC.
445 24TH STREET, SUITE 200, VERO BEACH, FL 32960
PHONE: 772-794-4100
WWW.KIMLEY-HORN.COM REGISTRY NO. 35106

Kyler P Durham

KHA PROJECT 047427053
DATE 08/05/2024
SCALE AS SHOWN
DESIGNED BY JC
DRAWN BY JC
CHECKED BY ACF

MANUFACTURER DETAILS

STARBUCKS CASHMERE
PREPARED FOR REGENCY
CITY OF PORT ST. LUCIE FLORIDA

PSL PROJ #: P24-148

SHEET NUMBER L-203

Plotted By:Durham, Kyler Sheet Set:STARBUCKS CASHMERE Layout:LANDSCAPE DETAILS December 11, 2024 02:59:52pm K:\VRB_LDEV\Regency\Florida\cashmere starbucks\CAD\plansheets\L-203 MANUFACTURER DETAILS.dwg
This document, together with the concepts and designs presented herein, as an instrument of service, is intended only for the specific purpose and client for which it was prepared. Reuse of and improper reliance on this document without written authorization and adaptation by Kimley-Horn and Associates, Inc. shall be without liability to Kimley-Horn and Associates, Inc.

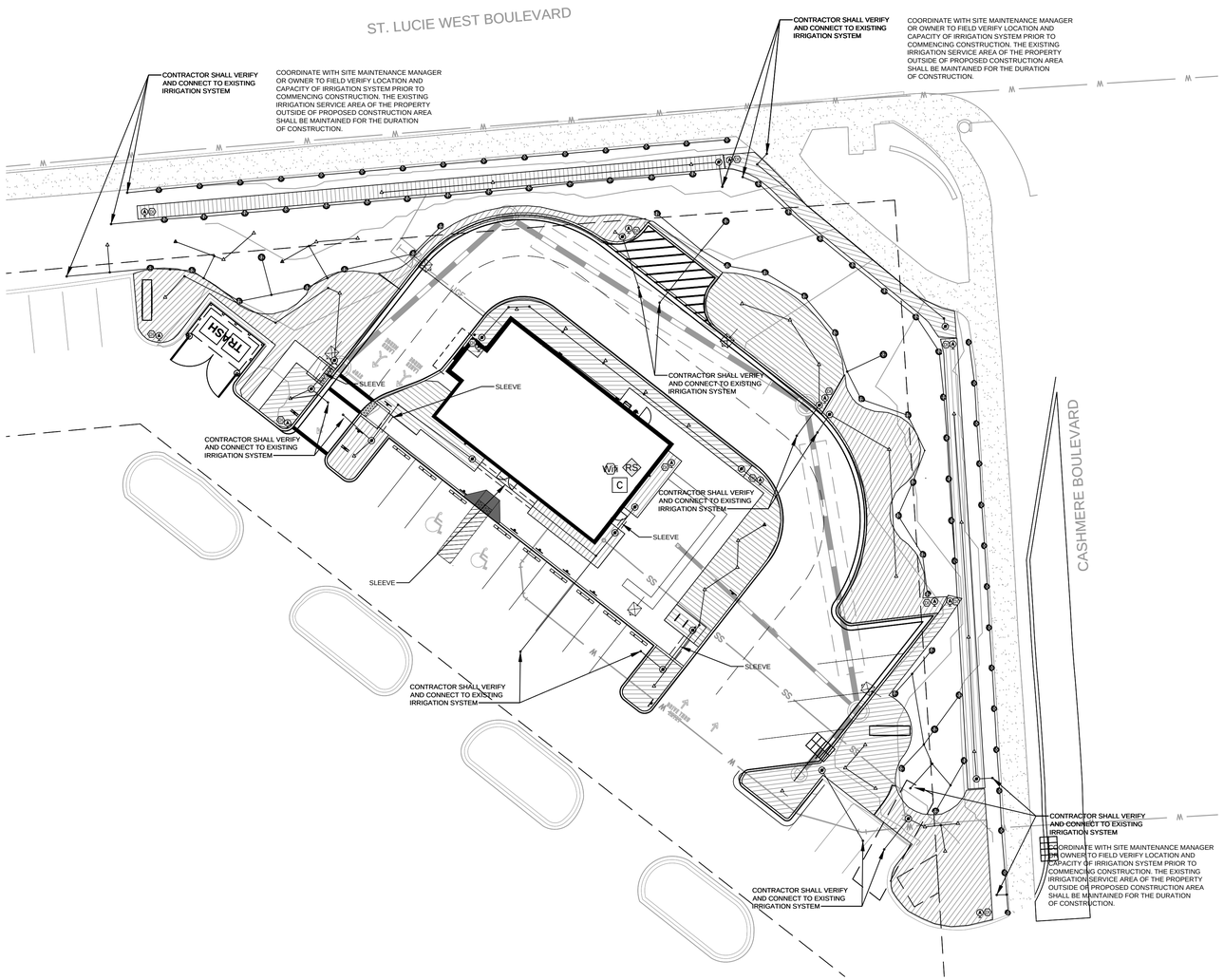

GRAPHIC SCALE IN FEET
0 10 20 40

NORTH

IRRIGATION SCHEDULE

SYMBOL	MANUFACTURER/MODEL/DESCRIPTION	QTY	PSI
10Q 10T 10H 10F	RAIN BIRD RD-06-P30-F 10 SERIES MPR TURF SPRAY, 6IN. POP-UP, WITH 30 PSI IN-STEM PRESSURE REGULATION, AND FLOW-SHIELD TECHNOLOGY. 1/2IN. NPT FEMALE THREADED INLET.	30	30
12Q 12T 12H 12TQ 12F	RAIN BIRD RD-06-P30-F 12 SERIES MPR TURF SPRAY, 6IN. POP-UP, WITH 30 PSI IN-STEM PRESSURE REGULATION, AND FLOW-SHIELD TECHNOLOGY. 1/2IN. NPT FEMALE THREADED INLET.	54	30
1401 1402 1404 1408	RAIN BIRD 1806-1400 FLOOD FLOOD BUBBLER 6.0IN. POPUP	41	60

SYMBOL	MANUFACTURER/MODEL/DESCRIPTION	QTY
	PIPE TRANSITION POINT IN DRIP BOX PIPE TRANSITION POINT FROM PVC LATERAL TO DRIP TUBING WITH RISER IN 6IN. DRIP BOX.	18
A	RAIN BIRD ARV050 1/2IN. AIR RELIEF VALVE, MADE OF QUALITY RUST-PROOF MATERIALS, WITH A 6IN. DRIP VALVE BOX (SEB 7X8 EMITTER BOX). USE WITH INSTALLATION BELOW SOIL. THE VALVE WILL ALLOW AIR TO ESCAPE THE PIPELINE, THUS PREVENTING WATER HAMMER OR BLOCKAGE.	13
DI	RAIN BIRD OPERIND DRIP SYSTEM OPERATION INDICATOR. STEM RISES 6IN. FOR CLEAR VISIBILITY WHEN DRIP SYSTEM IS CHARGED TO A MINIMUM OF 20PSI. INCLUDES 16IN. OF 1/4IN. DISTRIBUTION TUBING WITH CONNECTION FITTING PRE-INSTALLED.	13
	AREA TO RECEIVE DRIPLINE RAIN BIRD XFS-06-24 XFS SUB-SURFACE PRESSURE COMPENSATING DRIPLINE W/COPPER SHIELD TECHNOLOGY. 0.6 GPH EMITTERS AT 24" O.C. LATERALS SPACED AT 24" APART, WITH EMITTERS OFFSET FOR TRIANGULAR PATTERN. UV RESISTANT. SPECIFY XF INSERT FITTINGS.	4,722 L.F.

SYMBOL	MANUFACTURER/MODEL/DESCRIPTION	QTY
C	RAIN BIRD ESPLXME2 12 STATION TRADITIONALLY-WIRED, COMMERCIAL CONTROLLER. INDOOR/OUTDOOR, PLASTIC WALL-MOUNT ENCLOSURE.	1
WR	RAIN BIRD LNK2WIFI UPGRADES CONTROLLERS (ESP-M, ESP-RZXE, ST8) TO HAVE WEATHER DATA FOR ET-BASED ADJUSTMENTS (WATERSENSE APPROVED) & WIFI CAPABILITIES -	1
RS	RAIN BIRD WS-PRO2-PHS MAXICOM2, SITECONTROL, IQ, OR WEATHER REACH SERVER. COLLECTS AND STORES WEATHER DATA FROM FIELD LOCATIONS. PHONE CONNECT, SOLAR POWER MODEL. DIAL UP PHONE MODEM FOR PHONE COMMUNICATION WITH CENTRAL CONTROLLER, SOLAR POWERED.	1
	IRRIGATION LATERAL LINE: PVC CLASS 200 SDR 21	2,154 L.F.
	PIPE SLEEVE: PVC CLASS 200 TYPICAL PIPE SLEEVE FOR IRRIGATION PIPE. PIPE SLEEVE SIZE SHALL ALLOW FOR IRRIGATION PIPING AND THEIR RELATED COUPLINGS TO EASILY SLIDE THROUGH SLEEVING MATERIAL. EXTEND SLEEVES 18 INCHES BEYOND EDGES OF PAVING OR CONSTRUCTION.	41.0 L.F.

Valve Callout
Valve Number
Valve Flow
Valve Size

IRRIGATION CONNECTIONS TO EXISTING SYSTEM:

1. THE IRRIGATION CONTRACTOR SHALL SECURE ANY AND ALL NECESSARY PERMITS FOR THE WORK PRIOR TO COMMENCEMENT OF HIS OPERATIONS ON-SITE. COPIES OF THE PERMITS SHALL BE SENT TO THE OWNER/GENERAL CONTRACTOR.
2. CONTRACTOR SHALL COORDINATE WITH PROPERTY OWNER FOR OPERATING PARAMETERS OF THE EXISTING SYSTEM.
3. CONTRACTOR SHALL VERIFY CONTROLLER AND MAINLINE POINT OF CONNECTION AT PROJECT SITE WITH PROPERTY OWNER.
4. COORDINATE WITH PLANTING PLAN FOR PLANTER BED LOCATIONS AND TREE LOCATIONS.
5. ALL WIRING SHALL BE OF DIRECT BURIAL COPPER WIRE.
6. SPRAY HEADS, BUBBLERS, AND LATERALS SHOWN TO EXPRESS THE DESIGN INTENT TO PROVIDE 100% HEAD-TO-HEAD COVERAGE FOR ALL PROPOSED PLANTING AREAS. NEW IRRIGATION SPRAY HEADS AND BUBBLERS ARE TO BE INSTALLED TO SERVE PROPOSED PLANTINGS, AMENDING AN EXISTING NO-SITE IRRIGATION SYSTEM. CONTRACTOR SHALL MAKE ADJUSTMENTS TO THE DESIGN INTENT LAYOUT TO CONNECT TO THE EXISTING SYSTEM. IT IS ASSUMED THAT THE CONTRACTOR MAY NEED TO INSTALL ADDITIONAL LATERALS, SLEEVES, EXTEND MAINLINE, OR ADD CONTROL VALVES AND WIRING TO ACCOMMODATE THE IRRIGATION SYSTEM AMENDMENTS.
7. VERIFY LOCATIONS OF ALL UNDERGROUND UTILITIES PRIOR TO INSTALLATION OF IRRIGATION SYSTEM. ALL UTILITIES AND STRUCTURES MAY NOT BE SHOWN ON THESE PLANS-CONTRACTOR SHALL VERIFY THEIR LOCATION.
8. ALL PRESSURE MAINLINES UNDER ASPHALT PAVEMENT SHALL BE PLACED WITHIN SLEEVES AS NOTED. WHERE ELECTRIC VALVE CONTROL LINES PASS THROUGH A SLEEVE WITH OTHER MAIN OR LATERAL LINES THEY SHALL BE CONTAINED WITHIN A SEPARATE, SMALLER CONDUIT. ALL SLEEVES SHALL BE SIZED TWO PIPE SIZES GREATER THAN PIPE IT CARRIES.
9. CONTRACTOR SHALL PROVIDE "AS-BUILT" DRAWINGS OF THE FINAL INSTALLATION TO OWNER AT SUBSTANTIAL COMPLETION BEFORE RECEIVING FINAL PAYMENT. ALL SLEEVES UTILIZED BY THE IRRIGATION CONTRACTOR, WHETHER INSTALLED BY HIM OR NOT, SHALL BE LOCATED ON THE "AS-BUILT" DRAWINGS. THE DEPTH BELOW FINISH GRADE, TO THE NEAREST FOOT OF EACH END OF EACH SLEEVE SHALL BE NOTED AT EACH SLEEVE LOCATION ON THE "AS-BUILT" DRAWINGS.

IRRIGATION DESIGN NOTES:

1. INSTALLATION WORK SHALL BE COORDINATED WITH OTHER CONTRACTORS IN SUCH A MANOR AS TO ALLOW FOR SPEEDY AND ORDERLY COMPLETION OF ALL WORK ON THE SITE.
2. ALL PROPOSED TREES AND SHRUBS SHALL BE IRRIGATED BY A 100% AUTOMATIC UNDERGROUND IRRIGATION SYSTEM.
3. IRRIGATION SYSTEM SHALL BE CAPABLE OF SUPPLYING AN AVERAGE OF 1" OF WATER PER WEEK WITHIN WATERING RESTRICTIONS AS APPLICABLE.
4. IRRIGATION SYSTEM SHALL NOT BE INSTALLED THROUGH EXISTING, OR PRESERVED PLANT COMMUNITIES.
5. IRRIGATION SPRINKLER ZONES SHALL BE SEPARATED FOR HIGH AND LOW WATER REQUIREMENTS AND OPERATING ON DIFFERENT WATERING CYCLES.
6. IRRIGATION OVERTHROW TO IMPERVIOUS AND NATURAL AREAS SHALL BE MINIMIZED.
7. A RAIN SENSOR SHALL BE INSTALLED WITH THE IRRIGATION CONTROL SYSTEM, INSTALLED AT A LOCATION TO BE COORDINATED WITH OWNER.
8. IRRIGATED AREAS SHALL BE FULLY IRRIGATED WITH SPRAY HEADS & ROTORS SPACED TO PROVIDE 100% HEAD TO HEAD COVERAGE. ALL PROPOSED TREES AND PALMS SHALL BE IRRIGATED WITH TREE BUBBLERS.
9. THIS PLAN DEPICTS DESIGN INTENT ONLY FOR AMENDING AN EXISTING IRRIGATION SYSTEM AND ITS SOLE PURPOSE IS TO PROVIDE GUIDANCE FOR IRRIGATION IMPROVEMENTS REQUIRED TO SERVE PROPOSED PLANTINGS. THE SELECTED CONTRACTOR IS REQUIRED TO PROVIDE AN IRRIGATION DESIGN, AS REQUIRED BY THE PERMIT AGENCY. CONTRACTOR'S IRRIGATION DESIGN TO BE REVIEWED AMD APPROVED BY THE OWNER PRIOR TO SUBMITTING FOR AN IRRIGATION SYSTEM CONSTRUCTION PERMIT.
10. POINT OF CONNECTION TO BE DETERMINED BY IRRIGATION CONTRACTOR AND VERIFIED WITH THE LANDSCAPE ARCHITECT. IRRIGATION SYSTEM CONNECTIONS TO THE CITY OR COUNTY SERVICE SHALL COMPLY WITH ALL APPLICABLE CODES.
11. IRRIGATION SYSTEM CONNECTION TO POTABLE WATER SUPPLY WILL REQUIRE A DEDICATED IRRIGATION METER AND BACKFLOW PREVENTER, IRRIGATION CONTRACTOR RESPONSIBLE FOR ASSOCIATED PERMITTING AND FEES.

CALL 48 HOURS BEFORE YOU DIG

IT'S THE LAW! DIAL 811

811 Know what's below. Call before you dig.

SUNSHINE STATE ONE CALL OF FLORIDA, INC.

No.	REVISIONS	DATE	BY

Kimley»Horn
© 2024 KIMLEY-HORN AND ASSOCIATES, INC.
445 24TH STREET, SUITE 200, VERO BEACH, FL 32960
PHONE: 772-794-4100
WWW.KIMLEY-HORN.COM REGISTRY NO. 35106

THIS ITEM HAS BEEN DIGITALLY SIGNED AND SEALED BY KYLER DURHAM; PLA ON THE DATE ADJACENT TO THE SEAL. PRINTED COPIES OF THIS DOCUMENT ARE NOT CONSIDERED SIGNED AND SEALED AND THE SIGNATURE MUST BE VERIFIED ON ANY ELECTRONIC COPIES.

KYLER DURHAM ★ No LA6667668 ★ LICENSED PROFESSIONAL LANDSCAPE ARCHITECT
Digitally signed by Kyler Durham
Date: 2024.12.05 14:41:24 -05'00'

KHA PROJECT 047427053
DATE 08/05/2024
SCALE AS SHOWN
DESIGNED BY JC
DRAWN BY JC
CHECKED BY BVJ

IRRIGATION PLAN

STARBUCKS CASHMERE

PREPARED FOR REGENCY

CITY OF PORT ST. LUCIE FLORIDA

PSL PROJ #: P24-148

SHEET NUMBER L-300

Plotted By:Durham, Kyler Sheet Set:STARBUCKS CASHMERE Layout:IRRIGATION PLAN December 11, 2024 03:00:07pm K:\VRB_LDEV\Regency\Florida\cashmere starbucks\CAD\plansheets\L-300 IRRIGATION PLAN.dwg
This document, together with the concepts and designs presented herein, as an instrument of service, is intended only for the specific purpose and client for which it was prepared. Reuse of and improper reliance on this document without written authorization and adaptation by Kimley-Horn and Associates, Inc. shall be without liability to Kimley-Horn and Associates, Inc.

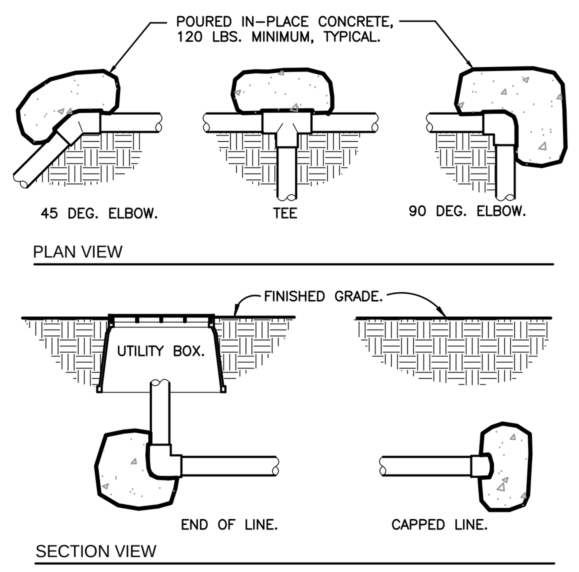

1 THRUST BLOCKING
3/4" = 1'-0"

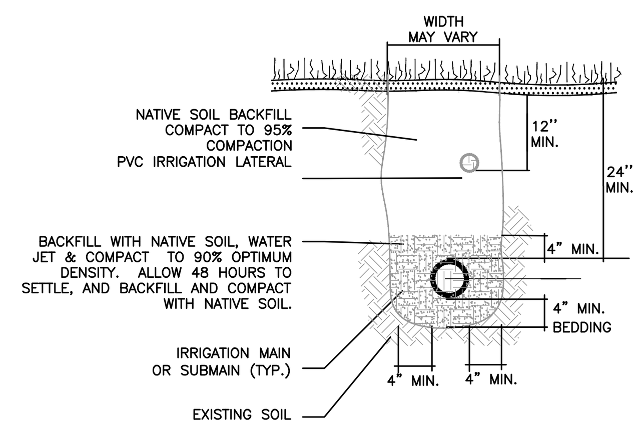

2 TRENCHING DETAIL
NOT TO SCALE

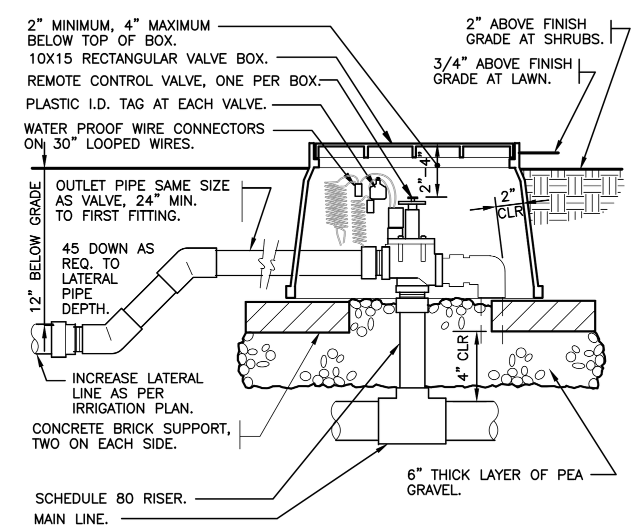

3 ELECTRIC REMOTE CONTROL VALVE
1 1/2" = 1'-0"

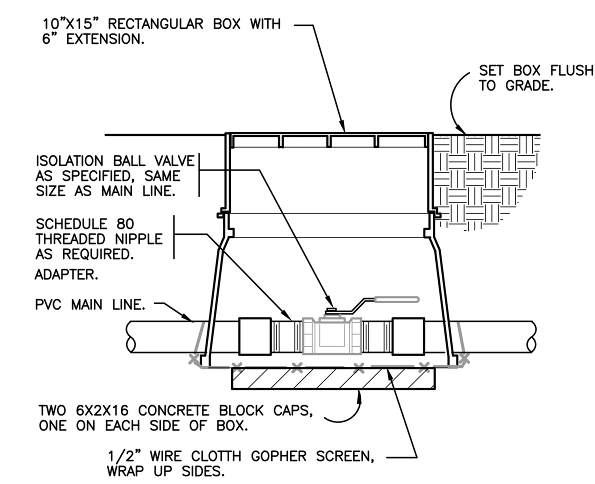

4 BRASS BALL ISOLATION VALVE
1 1/2" = 1'-0"

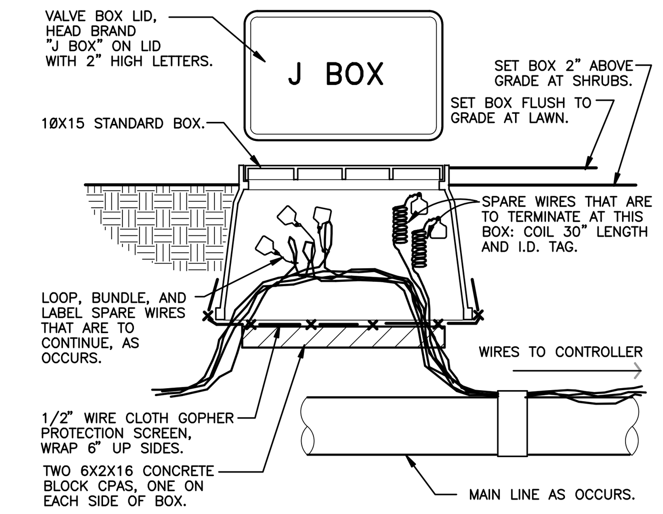

5 WIRE BUNDLE JUNCTION BOX
1 1/2" = 1'-0"

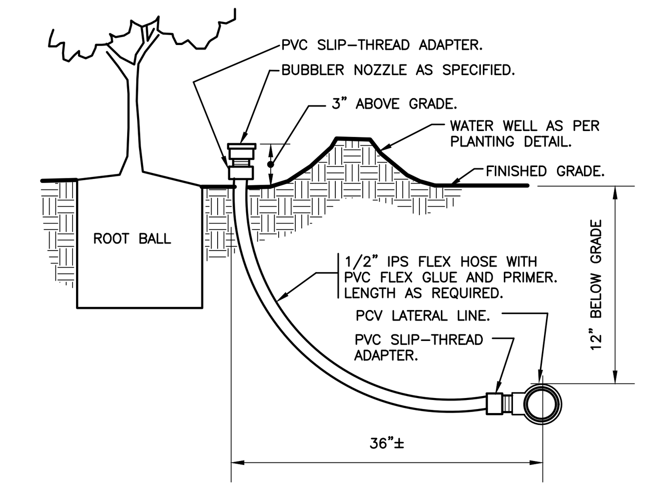

6 BUBBLER ON FLEX HOSE RISER
3" = 1'-0"

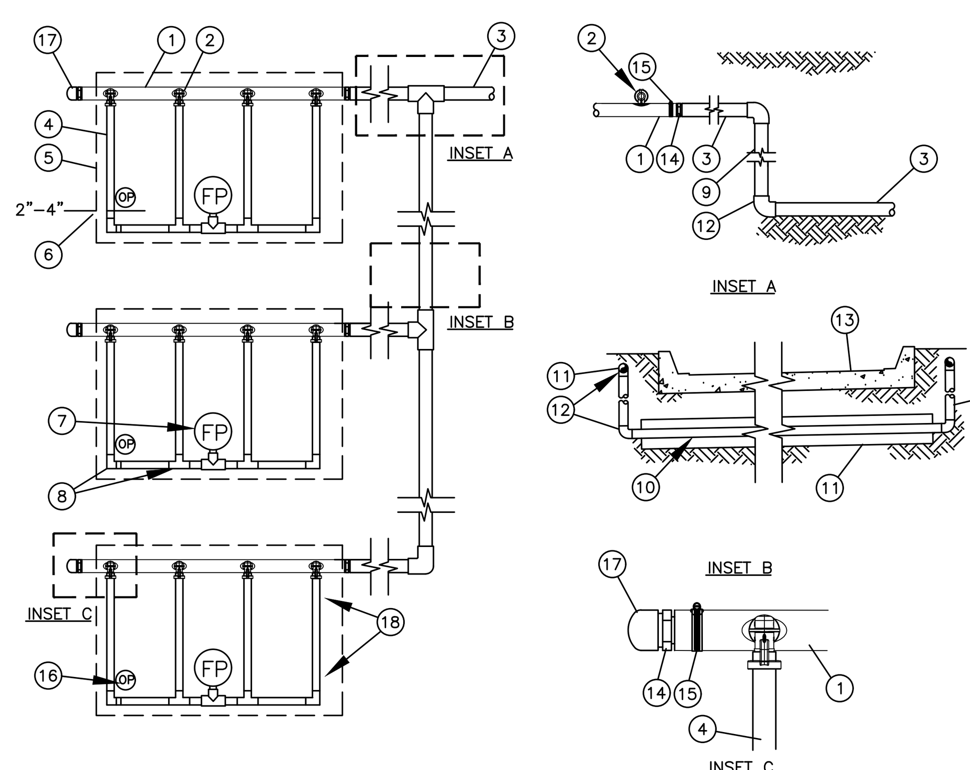

1. QF-SUPPLY HEADER
2. PRE-INSTALLED BARB FITTING
3. PVC DRIP MANIFOLD FROM RAIN BIRD CONTROL ZONE VALVE KIT (SIZED TO MEET LATERAL FLOW DEMAND)
4. RAIN BIRD XFS SERIES DRIPLINE (TYPICAL)
5. PERIMETER OF AREA
6. PERIMETER DRIPLINE PIPE TO BE INSTALLED 2"-4" FROM PERIMETER OF AREA
7. FLUSH POINT (TYPICAL) - SEE RAIN BIRD XFD DETAILS FOR FLUSH POINT INSTALLATION
8. BARB X BARB INSERT TEE OR ELL: RAIN BIRD XFF-TEE OR RAIN BIRD XFF-ELBOW (TYPICAL)
9. PVC RISER PIPE
10. PVC SUPPLY MANIFOLD
11. PVC SCH 40 SLEEVE PIPE SIZED TWICE THE SIZE OF MANIFOLD PIPE SIZE
12. PVC SCH 40 TEE OR ELL (TYPICAL)
13. PAVEMENT AND CURB
14. MALE ADAPTER INSERT
15. STAINLESS STEEL, OETIKER OR MURRAY CLAMP
16. OPERATION INDICATOR RAIN BIRD MODEL: OPERIND
17. PVC SCH 40 CAP
18. XF SERIES TIE-DOWN STAKES (TDS-050) REFER TO RAIN BIRD DRIPLINE DESIGN GUIDE FOR PROPER SPACING

NOTES:
1. DISTANCE BETWEEN LATERAL ROWS AND EMITTER SPACING TO BE BASED ON SOIL TYPE, PLANT MATERIALS AND CHANGES IN ELEVATION. SEE INSTALLATION SPECIFICATIONS ON RAIN BIRD WEB SITE (WWW.RAINBIRD.COM) FOR SUGGESTED SPACING.
2. LENGTH OF LONGEST DRIPLINE LATERAL SHOULD NOT EXCEED THE MAXIMUM SPACING SHOWN IN THE ACCOMPANYING TABLE.
3. PLACE TIE DOWN STAKES EVERY THREE FEET IN SAND, FOUR FEET IN LOAM, AND FIVE FEET IN CLAY.
4. AT FITTINGS WHERE THERE IS A CHANGE OF DIRECTION SUCH AS TEES OR ELBOWS, USE TIE-DOWN STAKES ON EACH LEG OF THE CHANGE OF DIRECTION.

6 TYPICAL DRIPLINE LAYOUT REQUIREMENTS
NOT TO SCALE

HUNTER INDUSTRIES
1940 Diamond Street
San Marcos, CA 92078
Main: 760-744-5240
Technical Support: 760-591-7383
www.hunterindustries.com

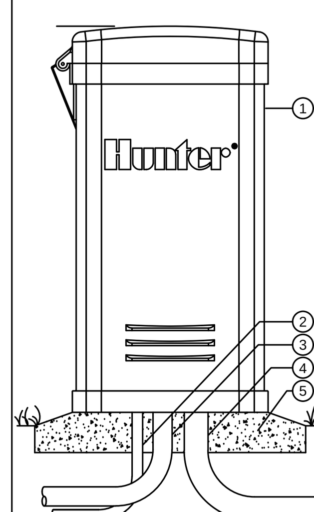

DETAIL LEGEND:
1. IRRIGATION CONTROLLER (HCC-800-PP) PER PLAN
2. ELECTRICAL SUPPLY CONDUIT - CONNECT TO POWER SOURCE, J-BOX INSIDE CONTROLLER
3. GROUND WIRE CONDUIT - GROUND PER ASIC GUIDELINES
4. IRRIGATION CONTROL WIRE IN CONDUIT - SIZE AND TYPE PER LOCAL CODES
5. CONCRETE PEDESTAL BASE PER PLAN OR THE HUNTER "PLASTIC PEDESTAL INSTRUCTION GUIDE" - INSURE POSITIVE DRAINAGE AWAY FROM PEDESTAL.

NOTES:
1. CONTROLLER ACCEPTS 120 VOLTS A.C. OR 230 VOLTS A.C. (INTERNATIONAL MODEL).
2. CONTROLLER SHALL BE HARD-WIRED TO GROUNDED 110 VAC POWER SOURCE
3. PEDESTAL IS 17" [43 cm] DEEP.
4. REFER TO THE HUNTER HCC INSTALLATION GUIDE FOR FURTHER INSTRUCTIONS.

7 IRRIGATION CONTROLLER - PLASTIC PEDESTAL (HCC-800-PP)
Hunter C.HCC.04 NOT TO SCALE

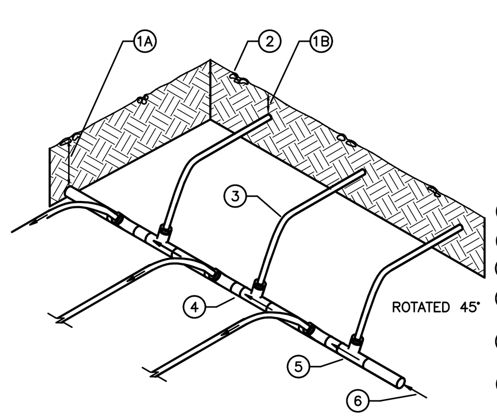

1A 12"
1B 3"
2 FINISHED GRADE
3 NETAFIM TECHLINE (TYP.)
4 PVC SUPPLY MANIFOLD
5 PVC TEE TO TECHLINE COMPRESSION ADAPTERS
6 FLOW FROM VALVE

CENTER FEED SUPPLY MANIFOLD

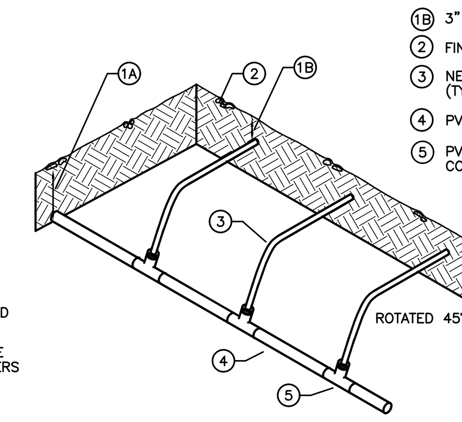

1A 12"
1B 3"
2 FINISHED GRADE
3 NETAFIM TECHLINE (TYP.)
4 PVC SUPPLY/EXHAUST MANIFOLD
5 PVC TEE TO TECHLINE COMPRESSION ADAPTERS

SUPPLY/EXHAUST MANIFOLD

8 LATERAL TO DRIP FEED DETAILS
NOT TO SCALE

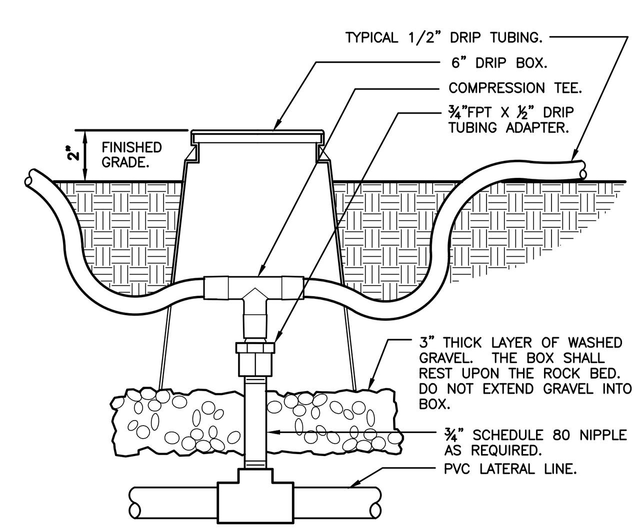

9 ZONE CONTROL
3" = 1'-0" 32 8413.46-03

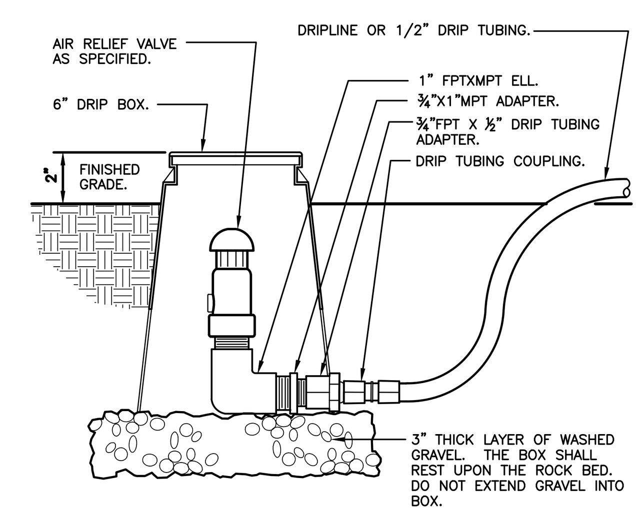

10 DRIP AIR RELIEF VALVE IN BOX
3" = 1'-0" 32 8413.53-03

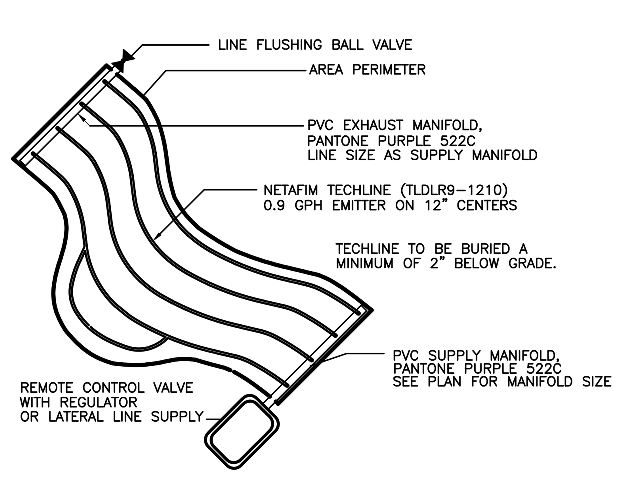

12 IRREGULAR AREAS
NOT TO SCALE

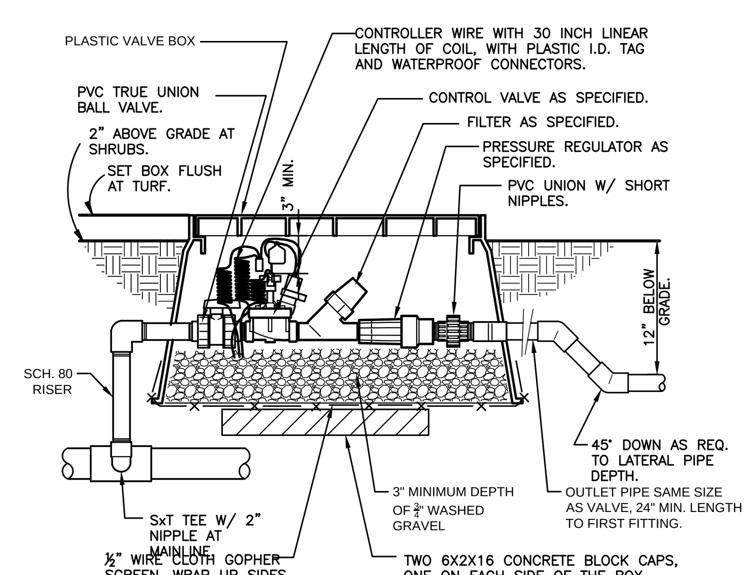

13 REMOTE CONTROL VALVE (DRIP)
NTS L-IR-DRI-06

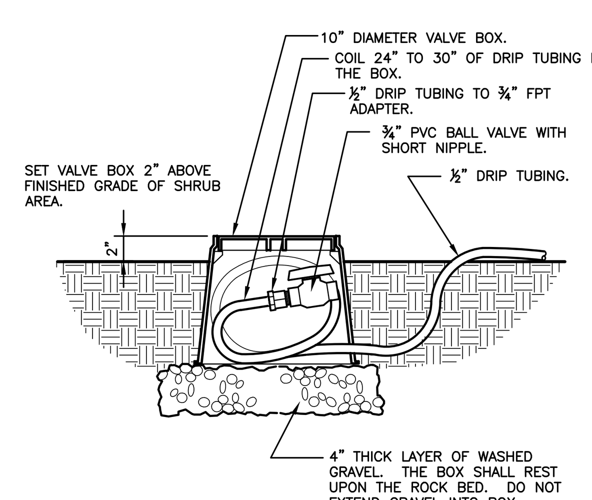

14 DRIP FLUSH VALVE
1 1/2" = 1'-0" 32 8413.49-03

CALL 48 HOURS BEFORE YOU DIG

IT'S THE LAW! DIAL 811

811 Know what's below. Call before you dig.

SUNSHINE STATE ONE CALL OF FLORIDA, INC.

THIS ITEM HAS BEEN DIGITALLY SIGNED AND SEALED BY KYLER DURHAM, PLA ON THE DATE ADJACENT TO THE SEAL.
PRINTED COPIES OF THIS DOCUMENT ARE NOT CONSIDERED SIGNED AND SEALED AND THE SIGNATURE MUST BE VERIFIED ON ANY ELECTRONIC COPIES.

No.	REVISIONS	DATE	BY

Kimley»Horn

© 2024 KIMLEY-HORN AND ASSOCIATES, INC.
445 24TH STREET, SUITE 200, VERO BEACH, FL 32960
PHONE: 772-794-4100
WWW.KIMLEY-HORN.COM REGISTRY NO. 35106

KYLER DURHAM LICENSE No LA6667668 STATE OF FLORIDA PROFESSIONAL LANDSCAPE ARCHITECT

KHA PROJECT 047427053
DATE 08/05/2024
SCALE AS SHOWN
DESIGNED BY JC
DRAWN BY JC
CHECKED BY BVJ

IRRIGATION DETAILS

STARBUCKS CASHMERE
PREPARED FOR REGENCY
CITY OF PORT ST. LUCIE FLORIDA

PSL PROJ #: P24-148

SHEET NUMBER L-301

Plotted By: Durham, Kyler Sheet Set: STARBUCKS CASHMERE Layout: IRRIGATION DETAILS December 11, 2024 03:00:14pm K:\VRB_LDEV\Regency\Florida\cashmere starbucks\CAD\plansheets\L-301 IRRIGATION DETAILS.dwg
This document, together with the concepts and designs presented herein, as an instrument of service, is intended only for the specific purpose and client for which it was prepared. Reuse of and improper reliance on this document without written authorization and adaptation by Kimley-Horn and Associates, Inc. shall be without liability to Kimley-Horn and Associates, Inc.

GENERAL IRRIGATION SPECIFICATIONS AND NOTES

2.10 AUTOMATIC CONTROL VALVE

The automatic remote control valves shall be as specified on the plans, or approved equal.

2.10 GATE VALVES

A. Gate valves for 3/4" through 2-1/2" shall be of brass or bronze construction, solid wedge, IPS threads, non-rising stem with wheel operating handle, for a continuous working pressure of 150 PSI.

Gate valves for 3" and larger: Iron body, brass or bronze mounted AWWA gate valves, with a clear waterway equal to the full nominal3.09 CONTROL WIRE

A. Control wiring between the controller and electric valves shall be buried in main line trenches or in separate trenches. Electrical connection at valve will allow for pigtail so solenoid can be removed from valve with sufficient slack to allow ends to be pulled 12" above ground for examination and cleaning.

B. An expansion loop shall be provided at every valve at 100' o.c. Expansion loop shall be formed by wrapping wire at least eight times around a 3/4" pipe and withdrawing pipe.

C. The wire shall be bundled and taped every ten feet. The wire shall be laid in the trench prior to installing the pipe being careful to install wire beneath and 6" to the side of the main pipe line.

D. Electrical connections to electric control valves shall be made with Rainbird Pen-Tite or Techdel GT-3-GEL - Tite connectors or equal.

Power Connections: Electrical connections to power and signal wires shall be made using 3M 82-A2 power cable splice kits.

E. diameter of the valve, rubber gasket for a continuous working pressure of 150p PSI. Valve shall be equipped with a square operating nut.

2.11 VALVE BOXES

A. For gate valves, use AMETEK #10-181-014 box with #10-181-015 locking lid, or as per the drawings.

B. For control valves 3/4" through 2", the drip valve assemblies, use AMETEK #10-181-014 box with #10-181-015 locking lid, or sized as necessary to effectively house the equipment

C. For control wiring splices, use AMETEK #10-181-014 box with #10-181-015 locking lid, or as per the drawings.

2.12 IRRIGATION WIRING

A. Wiring used for connecting the electric control valves to the controllers shall be Type UF, 600 volt, single strand, solid copper with PVC insulation 4/64" thick. Size shall be 14 gauge, red for "hot" or lead wires, and common wire to be 14 gauge, white in color.

B. Contractor shall perform an ohm test on ground to assure adequate protection against surges and indirect lightning strikes.

2.13 MISCELLANEOUS MATERIALS

A. Drainage Backfill: Cleaned gravel or crushed stone, graded from 1" maximum to 3/4" minimum.

B. Metalized Underground Tape: The detectable, underground utility marking tape shall consist of a minimum: 5 mil (0.005") overall thickness; five-ply composition; ultra-high molecular weight, 100% virgin polyethylene; acid, alkaline and corrosion resistant; with no less than 150 pounds of tensile break strength per 6" width; color-code impregnated with color stable, lead-free, organic pigments suitable for direct burial. Tapes utilizing reprocessed plastics or resins shall not be acceptable. The detectable, underground utility marking tape shall have a 35 gauge (0.0035") solid aluminum foil, core encapsulated within a 2.55 mil (0.00255") polyethylene backing and a 0.6 mil (0.006") PET cover coating. The laminate on each side shall consist of a 0.75 mil (0.00075") layer of hot LPDE, poly-fusing the "sandwich" without use of adhesives.

2.14 AUTOMATIC CONTROL SYSTEM

An Independent Station Controller: Furnish a solid state controller, as specified on the plans. Each station shall be capable of timing from zero (0) minute to 99 minutes per station in one (1) minute increments.

Each station shall be capable of operating two (2) 7VA electric valve-in-head solenoids.

The stand-alone controller shall have two (2) possible programs.

The stand-alone controller shall provide global percentage increase/decrease (water budget) for all stations simultaneously, from ten (10) to two hundred (200) percent, in ten (10) percent increments.

All stations shall be able to be turned on/off manually buy operating timing mechanism or by manual switch at station output.

The stand-alone controller shall incorporate an integral MOV surge protection into the terminal block for each of its 24 VAC field wire outputs. Controller power input wires will also incorporate surge protection.

The control panel shall provide continuous display time. It shall have alphanumeric displays of descriptive English menus and legend identifiers with cursor selection of function and precision value adjustment by rotary dial input.

The stand-alone controller shall be UL listed and FCC approved.

The stand-alone controller shall have 117 VAC, 60 Hz input, 26.5 VAC, 60 Hz output for operating 24 VAC solenoids.

The stand-alone controller cabinet shall be a lockable and weather-resistant outdoor cabinet. Mount as noted on plans.

The controller shall be equipped with lightening protection, by the Contractor, on both the primary (120v) and each secondary (24v) circuit. The controller circuits shall be grounded to a copper clad grounding rod located at each controller.

The controller shall be equipped for a water conservation device. as specified.

PART III: EXECUTION

3.01 INSPECTION

The Contractor shall examine the areas and conditions under which landscape irrigation system is to be installed and notify the Landscape Architect in writing of conditions detrimental to the proper and timely completion of the work. The Contractor shall proceed with the work until unsatisfactory conditions have been corrected in a manner acceptable to the Landscape Architect.

3.02 PREPARATION

The Contractor shall provide sleeves to accommodate piping under walks or paving. The Contractor shall coordinate with other trades and install to accurate levels prior to paving work. Cutting and patching of paving and concrete will not be permitted. The Contractor shall maintain all warning signs, shoring, barricades, flares and red lanterns, as required by any local codes, ordinances or permits.

3.03 TRENCHING AND BACKFILLING

A. Excavation: The Contractor shall stake out the location of each run of pipe, sprinkler heads, sprinkler valves and isolation valves prior to trenching. Excavation shall be open vertical construction sufficiently wide to provide free working space around the work installed and to provide ample space or backfilling and tamping. Trenches for pipe shall be cut to required grade lines, and compacted to provide accurate grade and uniform bearing for the full length of the line. The bottom of the trenches shall be free of rock or other sharp edged objects. Minimum cover shall be as follows:

Pipe and Wire Depth

Pressure Mainline	18" at top of pipe from Finish Grade
Lateral Piping (rotor)	12" at top of pipe from Finish Grade
Lateral Piping (pop-up)	12" at top of pipe from Finish Grade
Control Wiring	Side of main Line

B. Minimum Clearances: All pipelines shall have a minimum clearance of six inches from each other and from lines of other crafts. Parallel lines shall not be installed directly over one another. No lateral line shall be installed in the main-line trench.

3.04 INSTALLATION OF PIPING

A. PVC Pipe and Joints: The Contractor shall not install solvent wild pipe when air temperature is below 40ø F. Installation shall be in accordance with the manufacturer's instructions.

1. Only the solvent recommended by the pipe manufacturer shall be used. All PVC pipe and fittings shall be installed as outlined and instructed by the pipe manufacturer, and it shall be the Contractor's full responsibility to make arrangements with the pipe manufacturer for any field assistance that may be necessary. The Contractor shall assume full responsibility for the correct installation.

3.05 BACKFILLING PROCEDURES

Initial backfill on PVC lines shall be pulverized native soil, free of foreign matter. Within radius of 4" of the pipe shall be clean soil or sand. Plant locations shall take precedence over sprinkler and pipe locations. The Contractor shall coordinate the location of trees and shrubs with the routing of lines and final head locations.

A. Backfill and Compaction: The Contractor shall leave trenches slightly mounded to allow for settlement after the backfilling is completed. The Contractor shall clean the site of the work continuously of excess waste materials as the backfilling progresses, and leave in a neat condition. No trenches shall be left open for a period of more than 48 hours. Protect open trenches as required.

The Contractor shall carefully backfill excavated materials approved for backfilling, consisting of earth, loam, sand, and other approved materials, free of rock and debris over 1" in size. Backfill shall be compacted to original density of surrounding soil without dips, sunken areas, or irregularities.

The Contractor shall conform to DOT requirements for methods and required compaction percentages, for roads and paving.

The Contractor shall hand place the first 6" of backfill (or to top of pipe) and have it walked on so as to secure the position of the pipe and wire.

No wheel rolling will be allowed. The Contractor shall remove rock or debris extracted from backfill materials and dispose of offsite. The Contractor shall fill any voids left in backfill with approved backfill materials.

B. Existing Lawns: Where trenching is required across existing lawns, uniformly cut strips of sod 6" wider than trench. The Contractor shall remove sod in rolls of suitable size for handling and keep moistened until replanted. The Contractor shall replant sod within 48 hours after removal, roll and water generously. The Contractor shall resod any areas not in healthy condition equal to adjoining lawns 10 days after replanting.

C. Seeded Area: Trenching will be required across existing seeded areas, primarily roadway edging. The Contractor shall conform to the requirements of seeding, Section 02930 for the reseeding of the disturbed trench area.

D. Pavements: Jack and bore or directional bore piping under paving materials as per local regulatory codes. No cutting and patching of pavement will be permitted.

3.06 VALVES

A. Isolation Valves: Shall be sized corresponding to adjacent pipe size. Specified valve boxes shall be installed flush with finish grade in such a manner that surface forces applied to their exposed area will not be transmitted to the piping in which the valve is installed nor any other piping, wiring or other lines in the vicinity of said valves.

B. Gate Valves: Install where shown, in valve boxes.

C. Electric Control Valves: Shall be installed in specified valve boxes. The valve shall have 6" of 3/4" pea gravel installed below the bottom of the valve. If the valve box does not extend to the base of the valve, a valve box extension shall be installed. Electric control valves shall be installed where shown and grouped together where practical. The Contractor shall place no closer than 24" to walk edges, bikeway edges, buildings and walls. The Contractor shall adjust the valve to provide flow rate or rated operating pressure required for each sprinkler circuit.

3.07 CONDUIT AND SLEEVES

A. Conduit and Sleeves for Control Wiring and Main/Lateral Pipe: The Contractor shall provide and install where necessary. Contractor shall coordinate locations of previously installed sleeving with the General Site Contractor.

The Contractor shall coordinate installation of sleeves with work of other disciplines.

3.08 CONTROLS

A. The Contractor shall connect electric control valves to controllers in a clockwise sequence to correspond with station settings beginning with Stations 1, 2, 3, etc. Automatic controllers shall be provided and installed by the Contractor as noted on the drawings. All zones will be labeled on the controller.

B. Controllers shall be equipped with lightning protection and grounded to a standard 5/8" copper clad steel ground rod driven a minimum of 8' into the ground and clamped.

C. The electrical service to the controllers shall be performed by an electrical subcontractor in compliance with NEC requirements.

3.09 CONTROL WIRE

A. Control wiring between the controller and electric valves shall be buried in main line trenches or in separate trenches. Electrical connection at valve will allow for pigtail so solenoid can be removed from valve with sufficient slack to allow ends to be pulled 12" above ground for examination and cleaning.

B. An expansion loop shall be provided at every valve at 100' o.c. Expansion loop shall be formed by wrapping wire at least eight times around a 3/4" pipe and withdrawing pipe.

C. The wire shall be bundled and taped every ten feet. The wire shall be laid in the trench prior to installing the pipe being careful to install wire beneath and 6" to the side of the main pipe line.

D. Electrical connections to electric control valves shall be made with Rainbird Pen-Tite or Techdel GT-3-GEL - Tite connectors or equal.

Power Connections: Electrical connections to power and signal wires shall be made using 3M 82-A2 power cable splice kits.

3.10 SPRINKLER HEADS

A. General Provisions:

1. Sprinkler heads shall be installed as designated on the shop drawings. Heads shall be installed on flexible PVC. Top to be flush with finish grade or top of curb.

2. Spacing of heads shall not exceed the maximum indicated on the shop drawings (unless directed by the Landscape Architect). In no case shall the spacing exceed the maximum recommended by the manufacturer.

B. Head Types:

1. Pop-up- Rotary Sprinkler Heads: Shall be installed on flex joint and be set with top of head flush with finish grade. Heads installed at curb shall have 6" to 10" between perimeter of head and concrete. Heads placed at edge of pavement having no curb shall be installed 24" from edge of pavement.

2. Spray Pop-up Sprinkler Heads: Shall be installed on flexible PVC and be set with top of head flush with finished grade. Sprinkler heads placed adjacent to curbs will be installed 9" from concrete. Sprinkler heads placed adjacent to pavement having no curb shall be installed 24" from the edge of pavement.

3.11 COMPLETION

A. Flushing: Before sprinkler heads are set, the Contractor shall flush the lines thoroughly to make sure there is no foreign matter in the lines.

The Contractor shall flush the main lines from dead end fittings for a minimum of five minutes under a full head of pressure.

B. Testing: The Contractor shall notify Landscape Architect and Owner forty-eight (48) hours in advance of testing.

Prior to backfilling of main line fittings, Contractor shall fill the main line piping with water, in the presence of the Owner/Landscape Architect, taking care to purge the air from it by operating all the sprinkler control valves one or more times and/or such other means as may be necessary. A small, high pressure pump or other means of maintaining a continuous water supply shall be connected to the main line and set so as to maintain 100 PSI in the main line system for two (2) hours without interruption. When this has been accomplished and while the pressure in the system is still 100 PSI, leakage testing shall be performed in accordance with AWWA Standard C-600. Pressure readings shall be noted and make up water usage shall be recorded. Should the rate of make up water usage indicate significant leakage, the source of such leakage shall be found and corrected and the system then retested until the Owner/Landscape Architect is satisfied that the system is reasonably sound. Lateral line testing shall be conducted during the operating testing of the system by checking visually the ground surface until no leaks in this portion of the system are evident. Leaks shall be repaired or paid for by the Contractor at any time they appear during the warranty period.

C. Adjustment and Coverage of System: Coordinate pressure testing with adjustments and coverage test of system so both may occur at the same time. The Contractor shall balance and adjust the various components of the system so that the overall operation of the system is most efficient. This includes a synchronization of the controllers, adjustments to pressure regulators, pressure relief valves, part circle sprinkler heads, and individual station adjustments on the controllers.

3.12 WARRANTY

A. The Contractor shall fully warrant the landscape irrigation system for a period of one (1) year after the written final acceptance and will receive a written confirmation from the Landscape Architect that the warranty period is in effect.

B. During the warranty period, the Contractor will enforce all manufacturer's and supplier's warranties as if made by the Contractor himself. Any malfunctions, deficiencies, breaks, damages, disrepair, or other disorder due to materials, workmanship, or installation by the Contractor and his suppliers shall be immediately and properly corrected to the proper order as directed by the Owner and/or Landscape Architect.

C. Any damages caused by system malfunction shall be the responsibility of the Contractor who shall make full and immediate restoration for said damages.

3.13 WELL SPECIFICATION

WS-A. REFERENCE: General Provisions of the Contract, including General, Special and Supplementary Conditions and Division One General Requirements, apply to work specified in this section.

WS-B. DESCRIPTION OF WORK:

A. Furnish all materials, equipment, labor, supervision and all related items necessary to complete this phase of the work as indicated on the drawings and/or specified herein.
B. Capacity. Provide wells with minimum continuing producing capacity as follows: 70 GPM & 95 GPM
C. Extent: Water well work is shown on drawings.
D. Work: Includes furnishing all materials, equipment, labor, supervisors and all related items necessary to complete this phase of work, as indicated on drawings and specified herein.
E. Water well: Work is based on following criteria:
1. Type and size of well will be such as to assure a constant flow of water as indicated on irrigation plans.
2. Water shall be sand free with the minimum amount of iron or tanning possible in a given geographic location.
3. Driven steel case wells shall be driven to a depth into best rock formation - water bearing stratus.
4. Rotary drilled well, PVC cased shall be drilled a minimum of 5 inches larger than the casing diameter. Depth as required to obtain the best water quality available in a given geographic location.
5. A minimum of 20 feet of slotted stainless steel mesh shall extend from bottom of easing and shall be gravel packed. (TREMI-PIPED).
6. Casing shall be grouted to meet all state well drilling codes.
7. Applications and permits for drilling and developing wells.
   a. Drilling for final water well depth
   b. Development of wells
   c. Testing and disinfection
   d. Setting of pumps and coordination to provide power for pumps
F. Site Inspection: Contractor shall acquaint himself with all site conditions. Submission of his proposal shall be considered evidence that the examination has been conducted. Should utilities not shown on the plans be found during excavations, Contractor shall promptly notify the Owner's Represenative for instructions as to further action. Failure to do so will make Contractor liable for any and all damage thereto arising from his operations subsequent to discovery of such utilities not shown in plans.

WS-C QUALITY ASSURANCE:
A. Protecting Water Quality: Take precautions to prevent contaminated water or water having undesirable physical or chemical characteristics from entering stratum from which well is to draw is supply. Prevent contaminated water, gasoline, etc., from entering well either through opening or by seepage through ground surface.
B. Contamination: If well becomes contaminated or water having undesirable physical or chemical characteristics enters well due to neglect, provide casings, seals sterilizing agents or other materials to eliminate contamination or shut off undesirable water. Provide remedial work at no cost to the Owner.
C. Exercise Care: In performance of work to prevent breakdown or caving in of strata overlying that from which water is to be drawn. Develop, pump or bail well until water pumped from well is substantially free from sand.
D. Protect Work: To prevent either tampering with well or entrance of foreign matter. Upon completion, provide temporary well cap.
E. Driller's Requirements: Experienced foreman or driller to be constantly in control of well site and who has authority to take orders from Owner's Representative and, upon request, furnish well drilling information desired by Owner's Representative.
F. Abandonment of Drilling: If it becomes necessary to abandon drillings operations before completion of water producing well, follow regulations for abandonment of well as required by local authorities having jurisdiction. Should abandonment of drilling be necessary due to poor workmanship or negligence on part of the Contractor, no compensations will be allowed. Should abandonment of drilling necessary due to inadequate supply of good quality water, or for such other reason that Owner's Representative deems to be no fault of the Contractor, compensation for work will be based o unit prices in contract.

WS-D SUBMITTALS:
A. Shop Drawings: Submit in accordance with General Conditions of the Contract for construction. Shop drawings shall include manufacturer's product specifications and installation instructions. Include other data as may be required to show compliance with these specifications. Distribute an additional copy of each installation instruction to the Installer.
B. Samples, Records and Reports: Take samples of sub-strata formation at ten-foot intervals and at changes in formation throughout entire depth of well. Furnish samples of water-bearing formation to qualified testing laboratory and well screen manufacturer for mechanical sleeve analysis.
C. Provide Owner's Representative the following information for record purposes:
8. Casings - diameter, thickness, weight per foot of length, depth below grade
9. Screen - diameter, opening size
10. Pumping test - static water level, maximum safe yield, drawn down at maximum yield
11. Log - formation log indication strata encountered
12. Alignment - certification that well is aligned and plumb within specified tolerances
D. Salt Content: If well driller has knowledge that salt content may be present at 2" pilot well will be drilled not to exceed 700 P.P.M. salt content.
E. Submit Manufacturer's specifications: installation and start-up instructions, characteristics performance curves with selection points clearly indicated, shop drawings, wiring diagrams, and maintenance data including spare parts lists, for each types in each of the following.

WS-E WARRANTY: Provide warranty covering all material, workmanship and performance of well for a period of one (1) year after Final Acceptance.

CALL 48 HOURS BEFORE YOU DIG

IT'S THE LAW! DIAL 811

811. Know what's below. Call before you dig.

SUNSHINE STATE ONE CALL OF FLORIDA, INC.

THIS ITEM HAS BEEN DIGITALLY SIGNED AND SEALED BY KYLER DURHAM, PLA ON THE DATE ADJACENT TO THE SEAL.
PRINTED COPIES OF THIS DOCUMENT ARE NOT CONSIDERED SIGNED AND SEALED AND THE SIGNATURE MUST BE VERIFIED ON ANY ELECTRONIC COPIES.

No.	REVISIONS	DATE	BY

Kimley»Horn

© 2024 KIMLEY-HORN AND ASSOCIATES, INC.
445 24TH STREET, SUITE 200, VERO BEACH, FL 32960
PHONE: 772-794-4100
WWW.KIMLEY-HORN.COM REGISTRY NO. 35106

KYLER DURHAM ★ PROFESSIONAL LANDSCAPE ARCHITECT ★ LICENSE No LA6667668

KHA PROJECT 047427053
DATE 08/05/2024
SCALE AS SHOWN
DESIGNED BY JC
DRAWN BY JC
CHECKED BY BVJ

IRRIGATION NOTES

STARBUCKS CASHMERE
PREPARED FOR REGENCY
CITY OF PORT ST. LUCIE FLORIDA

PSL PROJ #: P24-148

SHEET NUMBER L-302

Plotted By:Durham, Kyler Sheet Set:STARBUCKS CASHMERE Layout:IRRIGATION NOTES December 11, 2024 03:00:23pm K:\VRB_LDEV\Regency\Florida\cashmere starbucks\CAD\plansheets\L-302 IRRIGATION NOTES.dwg
This document, together with the concepts and designs presented herein, as an instrument of service, is intended only for the specific purpose and client for which it was prepared. Reuse of and improper reliance on this document without written authorization and adaptation by Kimley-Horn and Associates, Inc. shall be without liability to Kimley-Horn and Associates, Inc.